NuTone®

SPECIFICATION SHEET

MODELS 9810WH, 9815WH FAN-FORCED WALL HEATERS

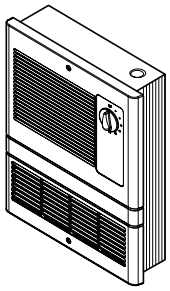

FEATURES

- Attractive white grille - exceptionally durable and heat resistant.
- Quiet fan and downflow action circulates heated air quickly.
- Two models offer wattage choice: 1000W or 1500W. Heaters easily wired at installation for 120V or 240V. Over temperature protected by thermal fuse.
- Built-in adjustable thermostat. Quiet thermally-protected motor and transverse flow blower.
- Long-life bearings with extra large oil reservoir.
- Hang tab aids installation.

SPECIFICATIONS

Electrical Rating:	120/240 Volts 9810WH: 1050 Total Watts 9815WH: 1550 Total Watts
Housing Dimensions:	12-1/2" x 10-1/2" x 3-3/8"
Housing Material:	Galvanized steel
Grille Dimensions:	14-3/4" x 11-9/16"
Grille Material:	Polymeric
Grille Finish:	White
Impeller Type:	Tangential
Impeller Dimensions:	7-1/8" x 2-3/8"
Element Type:	Coiled resistance wire
Amps:	9810WH: 120V, 9.0A 240V, 4.5A 9815WH: 120V, 13.0A 240V, 6.5A
Wattage:	9810WH: 1000 9815WH: 1500
Element Material:	Nickel-Chromium
Motor:	Thermally protected, shade pole,sleeve bearings
Switch Type:	On/Off switch provided as part of thermostat.

TYPICAL SPECIFICATION

Fan Forced Wall Heater shall be NuTone Model 9810WH (9815WH) manufactured according to listed specifications.

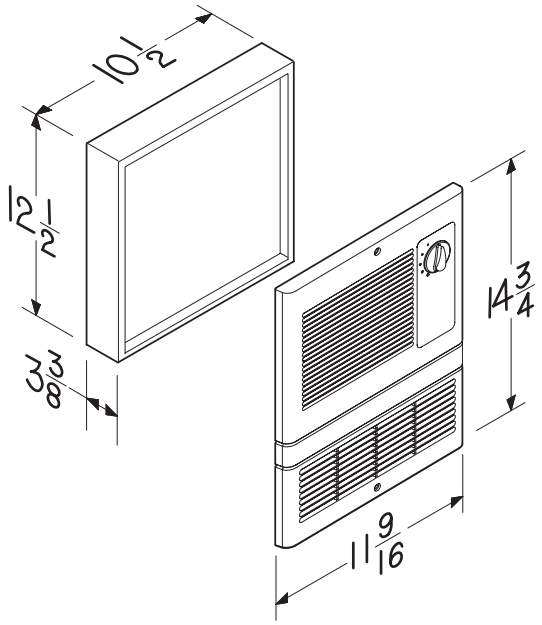

INSTALLATION

Complete instructions included with each unit.

Broan-NuTone LLC Hartford, Wisconsin www.nutone.com 888-336-3948

REFERENCE	QTY.	REMARKS	Project
			Location
			Architect
			Engineer
			Contractor
			Submitted by Date