VERSABAR CORPORATION

Produced and stocked in the following finishes and materials:					
●	●	●	●	●	●
G-90 Galv.	Green	Aluminum	H.R.P.O.	SS 304	SS 316

Note: Perforated channel has a reduced loading capacity, see introduction pages 6 & 7.

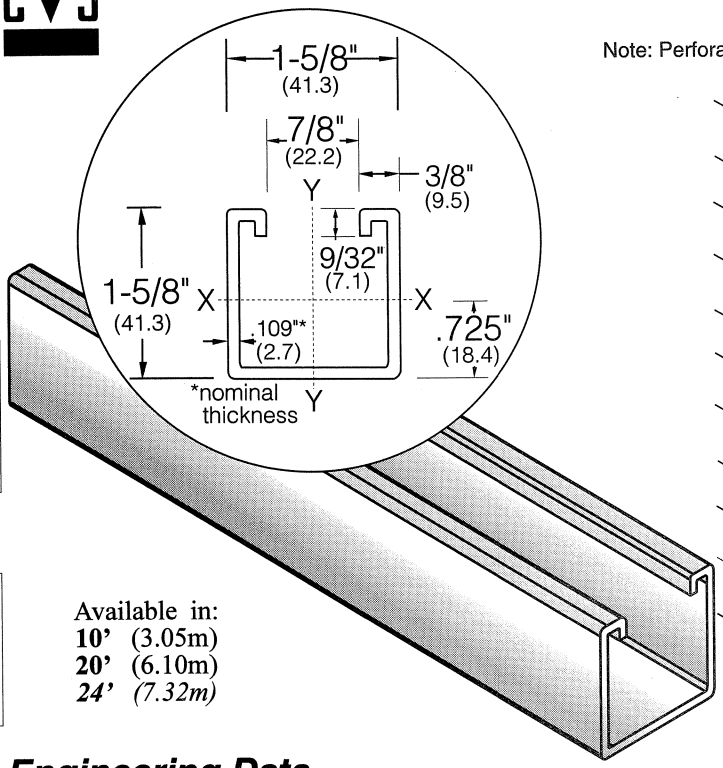

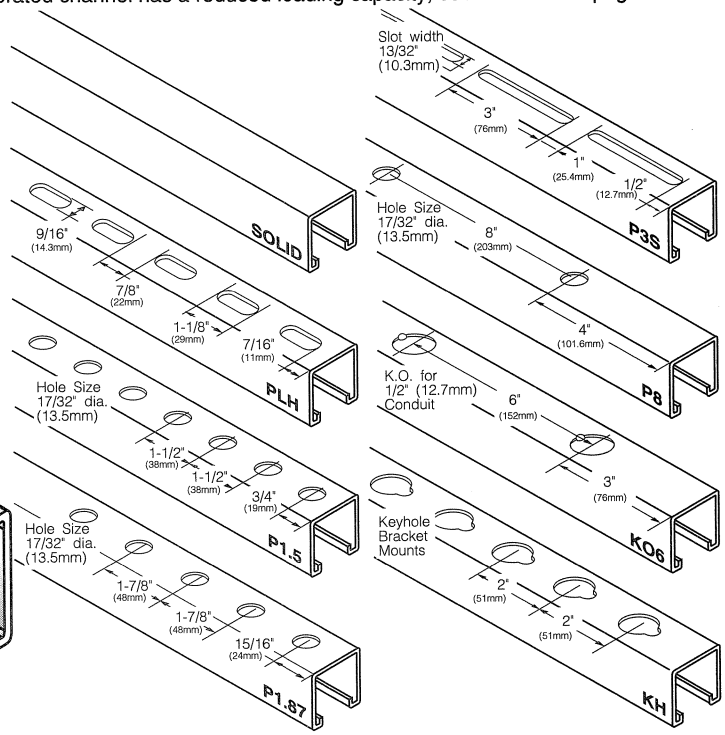

Available in:
10' (3.05m)
20' (6.10m)
24' *(7.32m)*

Engineering Data

elements of sections

VA-1

12 ga. **Wgt. Per L.F.** (Kg. Per M) **1.90 lbs.** (2.83)

Sectional Area	
sq. in.	cm^2
.559	3.61

X-X *axis*	Moment of inertia	Section modulus	Radius of gyration
	.1850 In. ^{4}	.2042 In. ^{3}	.580 In.
	7.70 cm. ^{4}	3.34 cm. ^{3}	1.47 cm.
Y-Y *axis*	**Moment of inertia**	**Section modulus**	**Radius of gyration**
	.2340 In. ^{4}	.2880 In. ^{3}	.653 In.
	9.74 cm. ^{4}	4.72 cm. ^{3}	1.66 cm.

beam loading data

Span or Unbraced Column Height		Maximum Allowable Uniform Loading		Deflection at Uniform Loading		Uniform Loading at Deflections			
						Span/240		Span/360	
in.	(mm)	Lbs.	kN	in.	(mm)	Lbs.	kN	Lbs.	kN
24	610	1691	7.5	0.06	1.5	1689	7.5	1689	7.5
36	914	1131	5.0	0.13	3.3	1131	5.0	900	4.0
48	1219	852	3.8	0.22	5.6	759	3.4	509	2.3
60	1524	680	3.0	0.35	8.9	491	2.2	321	1.4
72	1829	561	2.5	0.50	12.7	339	1.5	219	1.0
84	2134	479	2.1	0.68	17.3	251	1.1	171	0.8
96	2438	421	1.9	0.89	22.6	189	0.8	129	0.6
108	2743	381	1.7	1.14	29.0	151	0.7	101	0.4
120	3048	339	1.5	1.40	35.6	119	0.5	79	0.4
144	3658	281	1.2	1.99	50.5	81	0.4	59	0.3
168	4267	241	1.1	2.72	69.1	59	0.3	41	0.2
192	4877	209	0.9	3.55	90.2	51	0.2		
216	5486	191	0.8	4.57	116.1	39	0.2		
240	6096	169	0.8	5.61	142.5				

column loading data

Maximum Allowable Loading at Slot Face K=.80		Maximum Allowable Column Load Applied at Center of Gravity							
		K=.65		K=.80		K=1.0		K=1.2	
Lbs.	kN	Lbs.	kN	Lbs.	kN	Lbs.	kN	Lbs.	kN
3401	15.1	9601	42.7	9501	42.3	9321	41.5	9101	40.5
3002	13.4	7642	34.0	7402	32.9	7002	31.1	6490	28.9
2571	11.4	5911	26.3	5531	24.6	4981	22.2	4430	19.7
2229	9.9	4781	21.3	4391	19.5	3851	17.1	3331	14.8
1971	8.8	4091	18.2	3681	16.4	3142	14.0	2649	11.8
1759	7.8	3602	16.0	3171	14.1	2631	11.7	2161	9.6
1582	7.0	3221	14.3	2770	12.3	2242	10.0	1802	8.0
1431	6.4	2911	12.9	2451	10.9	1931	8.6	**	**
1292	5.7	2641	11.7	2182	9.7	**	**	**	**
								$**\frac{KL}{r} > 200$	

NOTES

- Long spans may have to be braced to prevent rotation and twist.
- Beam loading data already includes the weight of the member. This weight will have to be deducted in order to arrive at the net allowable load said beam span will carry.
- Maximum allowable uniformly distributed loads are listed for simple spans consisting of a beam on two supports. If load is to be concentrated at center of span, multiply given load by 0.5 and corresponding deflection figure by 0.8.

VERSABAR CORPORATION

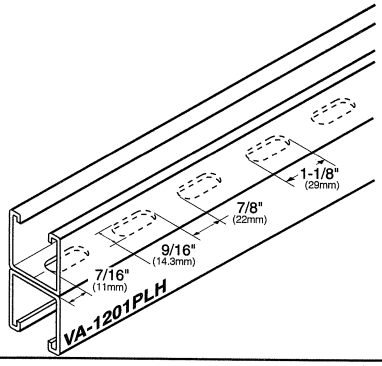

VA-1201 Galv. & VA-1201-PLH Galv. Feature a superior *non-welded* "Toggle Lock" design.

VA-1201 *Also available in aluminum.*

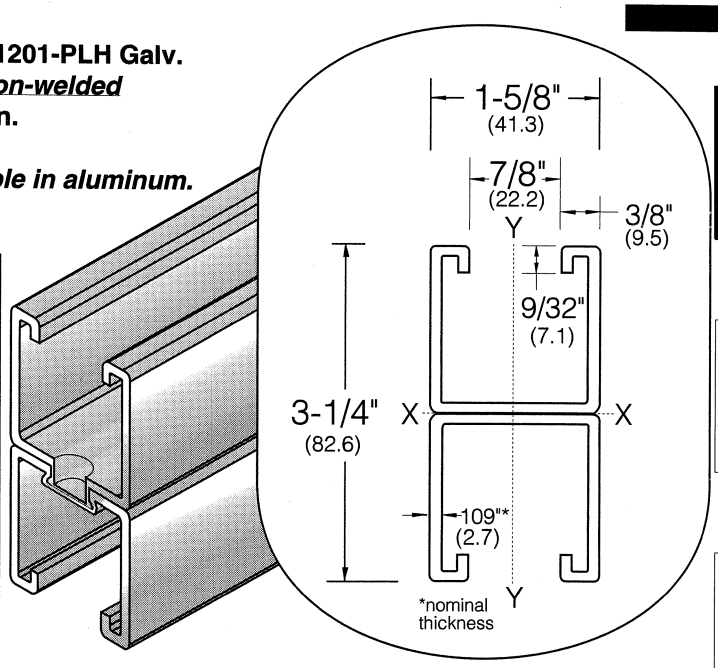

cross sectional cut of spot connection shown for illustrational purposes

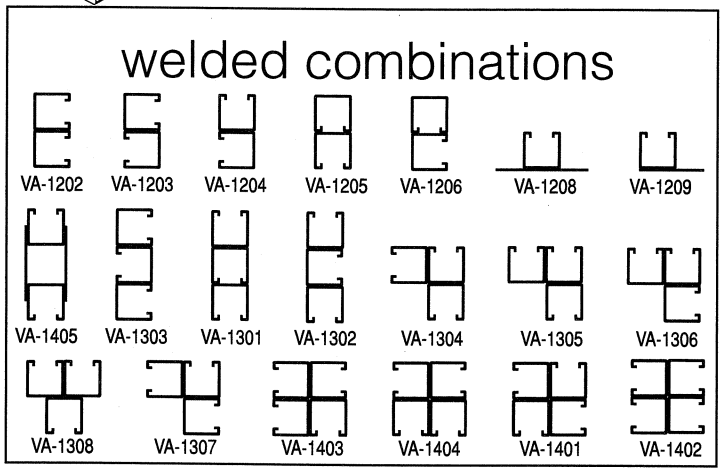

Engineering Data

elements of sections

VA-1201

12 ga. **Wgt. Per L.F.** **3.80 lbs.** (Kg. Per M) (5.65)

Sectional Area	
sq. in.	cm^2
1.118	7.21

X-X *axis*	Moment of inertia	Section modulus	Radius of gyration
	.9379 In. ^{4}	.5772 In. ^{3}	.924 In.
	39.04 cm. ^{4}	9.46 cm. ^{3}	2.34 cm.
Y-Y *axis*	**Moment of inertia**	**Section modulus**	**Radius of gyration**
	.4681 In. ^{4}	.5761 In. ^{3}	.653 In.
	19.48 cm. ^{4}	9.44 cm. ^{3}	1.66 cm.

beam loading data

Span or Unbraced Column Height		Maximum Allowable Uniform Loading		Deflection at Uniform Loading		Uniform Loading at Deflections Span/240		Uniform Loading at Deflections Span/360	
in.	(mm)	Lbs.	kN	in.	(mm)	Lbs.	kN	Lbs.	kN
24	610	2610	11.6	0.02	0.4	2610	11.6	2610	11.6
36	914	2610	11.6	0.06	1.4	2610	11.6	2610	11.6
48	1219	2400	10.7	0.13	3.3	2400	10.7	2401	10.7
60	1524	1920	8.5	0.20	5.1	1920	8.5	1629	7.2
72	1829	1601	7.1	0.28	7.1	1601	7.1	1129	5.0
84	2134	1370	6.1	0.39	9.9	1242	5.5	829	3.7
96	2438	1200	5.3	0.50	12.7	949	4.2	641	2.9
108	2743	1070	4.8	0.64	16.3	752	3.3	501	2.2
120	3048	960	4.3	0.79	20.1	611	2.7	412	1.8
144	3658	800	3.6	1.13	28.7	420	1.9	279	1.2
168	4267	690	3.1	1.55	39.4	310	1.4	211	0.9
192	4877	600	2.7	2.02	51.3	241	1.1	161	0.7
216	5486	530	2.4	2.53	64.3	192	0.9	131	0.6
240	6096	480	2.1	3.15	80.0	149	0.7	101	0.4

(Uniform beam loading on 24" and 36" spans limited by weld shear.)

column loading data

Maximum Allowable Loading at Slot Face K=.80		Maximum Allowable Column Load Applied at Center of Gravity K=.65		K=.80		K=1.0		K=1.2	
Lbs.	kN	Lbs.	kN	Lbs.	kN	Lbs.	kN	Lbs.	kN
6360	28.3	21400	95.2	21176	94.2	20871	92.8	20411	90.8
6190	27.5	20960	93.2	20412	90.8	19652	87.4	18672	83.1
5970	26.6	21231	94.4	19366	86.1	17966	79.9	16255	72.3
5340	23.8	19244	85.6	17941	79.8	15781	70.2	13141	58.5
3968	17.7	18129	80.6	16251	72.3	13141	58.5	9525	42.4
3026	13.5	16810	74.8	14256	63.4	10080	44.8	6998	31.1
2359	10.5	15293	68.0	11952	53.2	7752	34.5	5382	23.9
1865	8.3	13566	60.3	9569	42.6	6110	27.2	4251	18.9
1513	6.7	11643	51.8	7735	34.4	4952	22.0	**	**
								$**\frac{KL}{r} > 200$	

NOTES

- Long spans may have to be braced to prevent rotation and twist.
- Beam loading data already includes the weight of the member. This weight will have to be deducted in order to arrive at the net allowable load said beam span will carry.
- Maximum allowable uniformly distributed loads are listed for simple spans consisting of a beam on two supports. If load is to be concentrated at center of span, multiply given load by 0.5 and corresponding deflection figure by 0.8.

VERSABAR CORPORATION

Produced and stocked in the following finishes and materials:					
●	●	○	●	●	●
G-90 Galv.	Green	Aluminum	H.R.P.O.	SS 304	SS 316

Note: Perforated channel has a reduced loading capacity, see introduction pages 6 & 7.

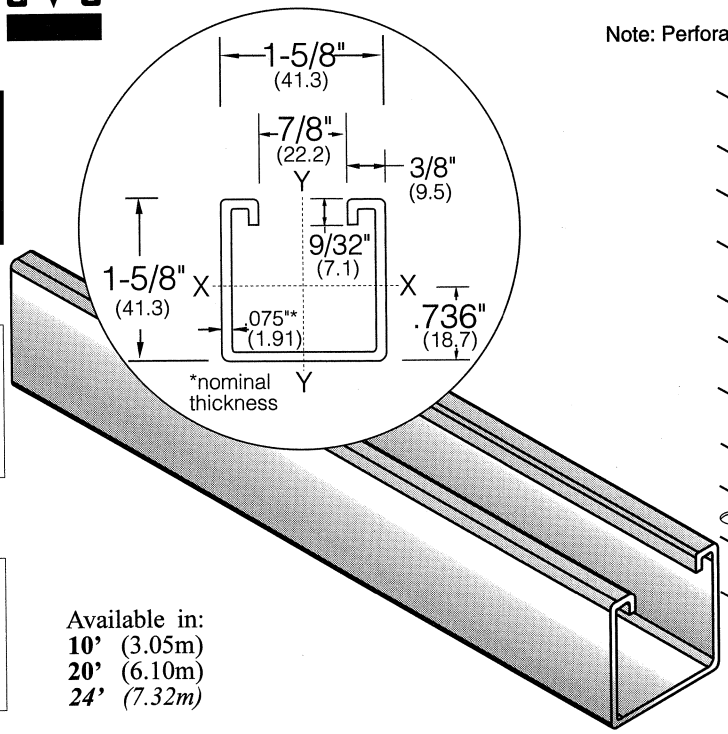

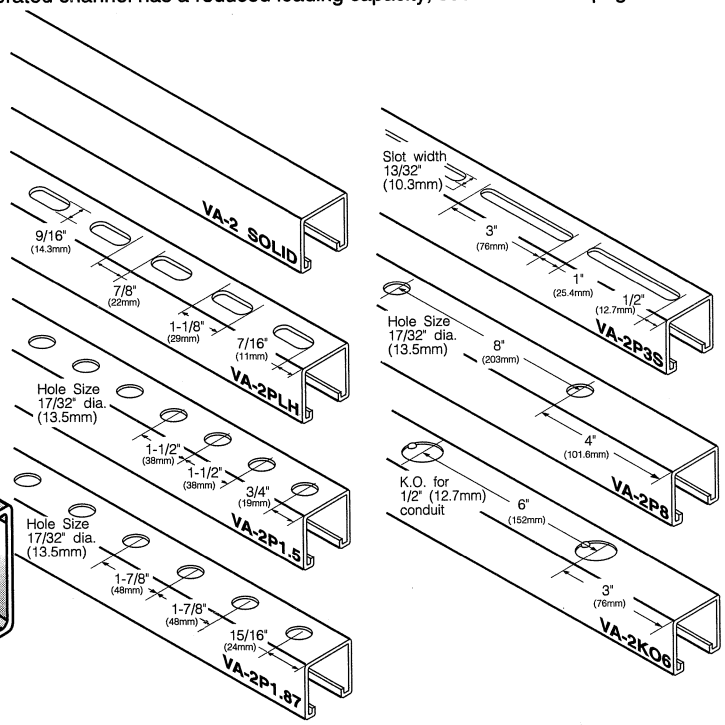

Available in:
10' (3.05m)
20' (6.10m)
24' *(7.32m)*

Engineering Data

elements of sections

VA-2

14 ga. **Wgt. Per L.F.** (Kg. Per M) **1.4 lbs.** (2.08)

Sectional Area	
sq. in.	cm^2
.412	2.66

X-X *axis*	Moment of inertia	Section modulus	Radius of gyration
	.1482 In. ^{4}	.1654 In. ^{3}	.596 In.
	6.17 cm. ^{4}	2.71 cm. ^{3}	1.51 cm.
Y-Y *axis*	**Moment of inertia**	**Section modulus**	**Radius of gyration**
	.1828 In. ^{4}	.2249 In. ^{3}	.662 In.
	7.61 cm. ^{4}	3.68 cm. ^{3}	1.68 cm.

beam loading data										column loading data									
Span or Unbraced Column Height		Maximum Allowable Uniform Loading		Deflection at Uniform Loading		Uniform Loading at Deflections				Maximum Allowable Loading at Slot Face K=.80		Maximum Allowable Column Load Applied at Center of Gravity							
						Span/240		Span/360				K=.65		K=.80		K=1.0		K=1.2	
in.	(mm)	Lbs.	kN	in.	(mm)	Lbs.	kN	Lbs.	kN	Lbs.	kN	Lbs.	kN	Lbs.	kN	Lbs.	kN	Lbs.	kN
24	610	1380	6.1	0.06	1.4	1380	6.1	1380	6.1	2721	12.1	6123	27.2	5875	26.1	5485	24.4	5039	22.4
36	914	920	4.1	0.13	3.3	920	4.1	719	3.2	2332	10.4	5361	23.8	5038	22.4	4305	19.1	3520	15.7
48	1219	688	3.1	0.23	5.8	606	2.7	404	1.8	1889	8.4	3731	16.6	3541	15.8	3010	13.4	2325	10.3
60	1524	550	2.4	0.36	9.0	388	1.7	259	1.2	1591	7.1	2879	12.8	2693	12.0	2206	9.8	1742	7.7
72	1829	459	2.0	0.51	13.0	269	1.2	180	0.8	1392	6.2	2391	10.6	2215	9.9	1742	7.7	1398	6.2
84	2134	395	1.8	0.70	17.7	197	0.9	130	0.6	1231	5.5	2069	9.2	1891	8.4	1443	6.4	1170	5.2
96	2438	343	1.5	0.92	23.4	149	0.7	99	0.4	1101	4.9	1851	8.2	1610	7.2	1238	5.5	1003	4.5
108	2743	305	1.4	1.16	29.5	118	0.5	80	0.4	1003	4.5	1669	7.4	1398	6.2	1077	4.8	**	**
120	3048	277	1.2	1.44	36.6	97	0.4	65	0.3	913	4.1	1531	6.8	1238	5.5	**	**	**	**
144	3658	225	1.0	2.04	51.8	69	0.3	46	0.2									$**\frac{KL}{r} > 200$	
168	4267	198	0.9	2.82	71.6	49	0.2	27	0.1										
192	4877	166	0.7	3.57	90.7	39	0.2	27	0.1										
216	5486	147	0.7	4.50	114.3	29	0.1												
240	6096	138	0.6	5.73	145.5														

NOTES

- Long spans may have to be braced to prevent rotation and twist.
- Beam loading data already includes the weight of the member. This weight will have to be deducted in order to arrive at the net allowable load said beam span will carry.
- Maximum allowable uniformly distributed loads are listed for simple spans consisting of a beam on two supports. If load is to be concentrated at center of span, multiply given load by 0.5 and corresponding deflection figure by 0.8.

VERSABAR CORPORATION

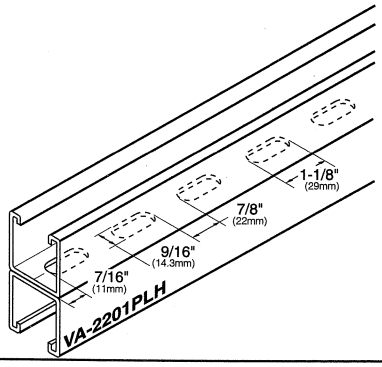

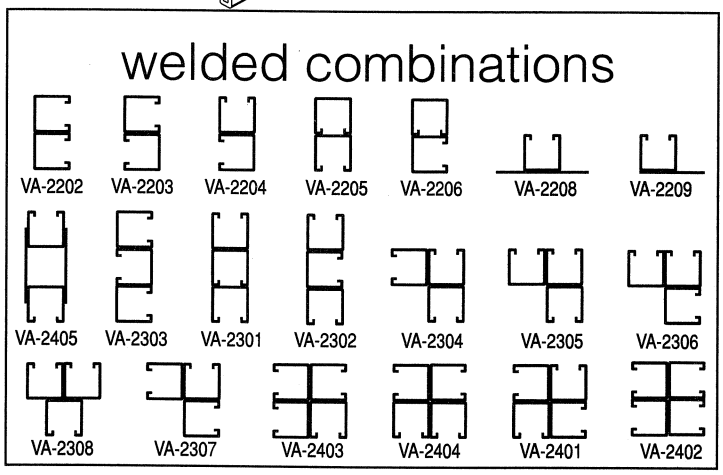

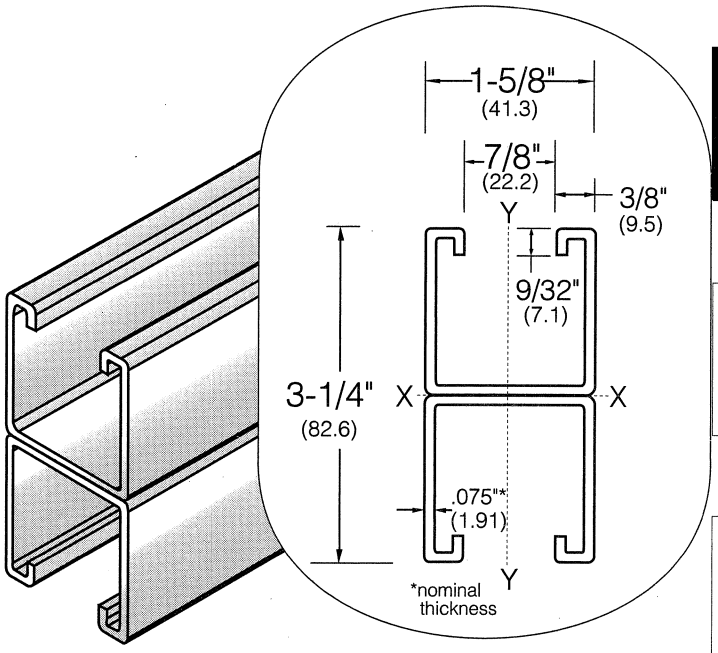

Engineering Data

elements of sections

VA-2201

14 ga. Wgt. Per L.F. (Kg. Per M) **2.8 lbs.** (4.16)

Sectional Area	
sq. in.	cm^2
.824	5.32

	Moment of inertia	Section modulus	Radius of gyration
X-X *axis*	.7401 In. ^{4} 30.80 cm. ^{4}	.4555 In. ^{3} 7.46 cm. ^{3}	.942 In. 2.39 cm.
Y-Y *axis*	.3655 In. ^{4} 15.21 cm. ^{4}	.4499 In. ^{3} 7.37 cm. ^{3}	.622 In. 1.68 cm.

beam loading data										column loading data											
Span or Unbraced Column Height		Maximum Allowable Uniform Loading		Deflection at Uniform Loading		Uniform Loading at Deflections				Maximum Allowable Loading at Slot Face K=.80		Maximum Allowable Column Load Applied at Center of Gravity							
						Span/240		Span/360				K=.65		K=.80		K=1.0		K=1.2	
in.	(mm)	Lbs.	kN	in.	(mm)	Lbs.	kN	Lbs.	kN	Lbs.	kN	Lbs.	kN	Lbs.	kN	Lbs.	kN	Lbs.	kN
24	610	1751	7.8	0.01	0.4	1751	7.8	1751	7.8	4925	21.9	13093	58.2	12995	57.8	12832	57.1	12635	56.2
36	914	1751	7.8	0.05	1.2	1751	7.8	1751	7.8	4820	21.4	12850	57.2	12632	56.2	12260	54.5	11809	52.5
48	1219	1751	7.8	0.12	2.9	1751	7.8	1751	7.8	4675	20.8	12514	55.7	12120	53.9	11460	51.0	10652	47.4
60	1524	1519	6.8	0.20	5.0	1517	6.7	1293	5.8	4019	17.9	12085	53.8	11459	51.0	10431	46.4	9170	40.8
72	1829	1264	5.6	0.28	7.1	1266	5.6	897	4.0	3050	13.6	11549	51.4	10653	47.4	9172	40.8	7362	32.7
84	2134	1086	4.8	0.38	9.7	988	4.4	661	2.9	2363	10.5	10925	48.6	9705	43.2	7685	34.2	5466	24.3
96	2438	951	4.2	0.50	12.7	758	3.4	504	2.2	1867	8.3	10200	45.4	8610	38.3	6020	26.8	4185	18.6
108	2743	842	3.7	0.63	16.1	598	2.7	398	1.8	1497	6.7	9375	41.7	7365	32.8	4766	21.2	3308	14.7
120	3048	758	3.4	0.78	19.9	485	2.2	323	1.4	1215	5.4	8455	37.6	6029	26.8	3857	17.2	**	**
144	3658	639	2.8	1.14	29.0	337	1.5	216	1.0									$**\frac{KL}{r} > 200$	
168	4267	546	2.4	1.56	39.6	245	1.1	166	0.7										
192	4877	476	2.1	2.02	51.3	182	0.8	125	0.6										
216	5486	415	1.8	2.52	64.0	146	0.6	92	0.4										
240	6096	375	1.7	3.14	79.8	113	0.5	73	0.3										

(Uniform beam loading on 24" and 36" spans limited by weld shear.)

NOTES

- Long spans may have to be braced to prevent rotation and twist.
- Beam loading data already includes the weight of the member. This weight will have to be deducted in order to arrive at the net allowable load said beam span will carry.
- Maximum allowable uniformly distributed loads are listed for simple spans consisting of a beam on two supports. If load is to be concentrated at center of span, multiply given load by 0.5 and corresponding deflection figure by 0.8.

VERSABAR CORPORATION

Produced and stocked in the following finishes and materials:					
●	○	○	○	●	●
G-90 Galv.	Green	Aluminum	H.R.P.O.	SS 304	SS 316

Note: Perforated channel has a reduced loading capacity, see introduction pages 6 & 7.

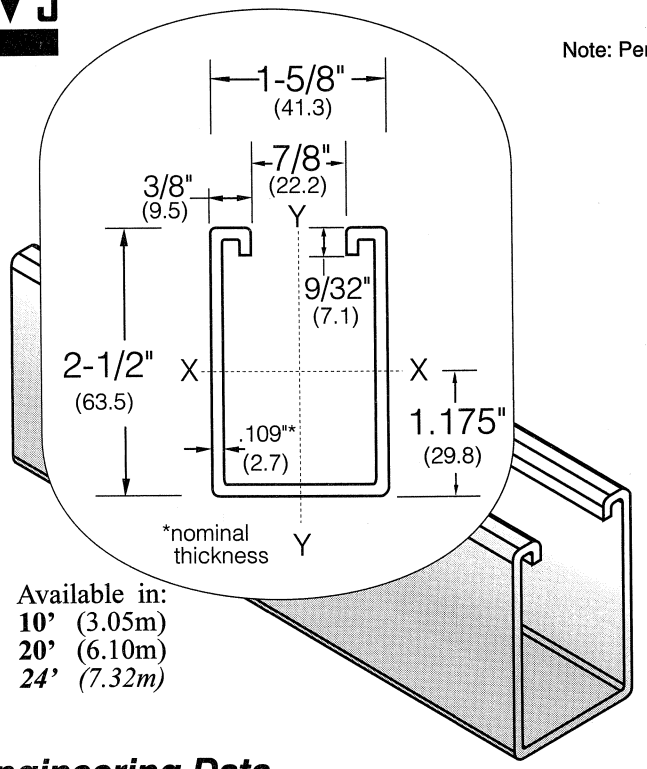

Available in:
10' (3.05m)
20' (6.10m)
24' *(7.32m)*

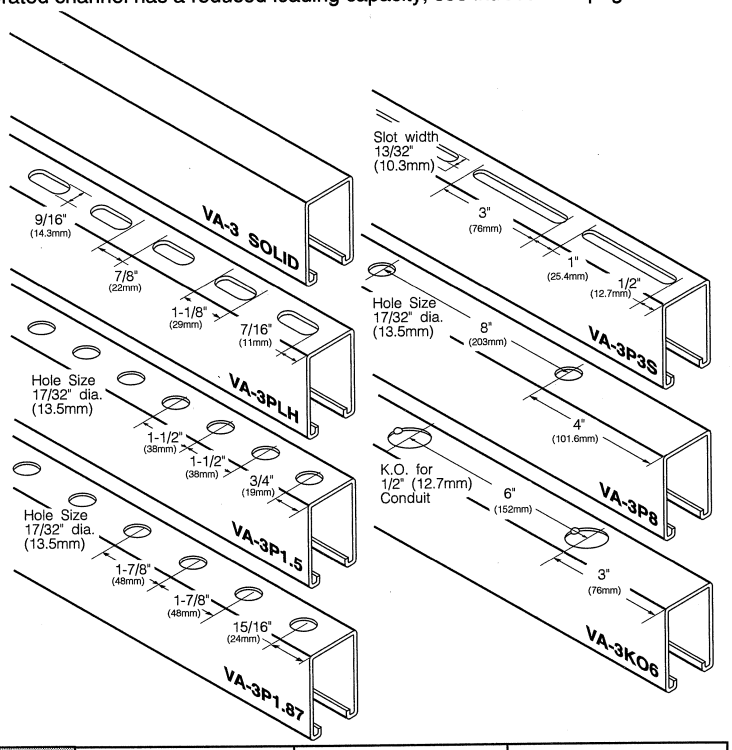

Engineering Data

elements of sections

VA-3

12 ga. Wgt. Per L.F. **2.47 lbs.** (Kg. Per M) (3.67)

Sectional Area	
sq. in.	cm^2
.727	4.69

X-X *axis*	Moment of inertia	Section modulus	Radius of gyration
	.5203 In. ^{4}	.3927 In. ^{3}	.852 In.
	21.65 cm. ^{4}	6.43 cm. ^{3}	2.16 cm.
Y-Y *axis*	**Moment of inertia**	**Section modulus**	**Radius of gyration**
	.3306 In. ^{4}	.4068 In. ^{3}	.679 In.
	13.76 cm. ^{4}	6.66 cm. ^{3}	1.72 cm.

beam loading data										column loading data											
Span or Unbraced Column Height		Maximum Allowable Uniform Loading		Deflection at Uniform Loading		Uniform Loading at Deflections				Maximum Allowable Loading at Slot Face K=.80		Maximum Allowable Column Load Applied at Center of Gravity							
						Span/240		Span/360				K=.65		K=.80		K=1.0		K=1.2	
in.	(mm)	Lbs.	kN	in.	(mm)	Lbs.	kN	Lbs.	kN	Lbs.	kN	Lbs.	kN	Lbs.	kN	Lbs.	kN	Lbs.	kN
24	610	3283	14.6	0.04	1.0	3283	14.6	3283	14.6	4492	20.0	9640	42.9	9245	41.1	8631	38.4	7935	35.3
36	914	2193	9.8	0.09	2.3	2193	9.8	2193	9.8	3816	17.0	8563	38.1	7935	35.3	6789	30.2	5575	24.8
48	1219	1643	7.3	0.15	3.8	1643	7.3	1432	6.4	3086	13.7	5812	25.9	5542	24.7	4782	21.3	3720	16.5
60	1524	1313	5.8	0.24	6.1	1313	5.8	911	4.1	2612	11.6	4483	19.9	4231	18.8	3526	15.7	2810	12.5
72	1829	1093	4.9	0.34	8.6	951	4.2	635	2.8	2198	9.8	3732	16.6	3485	15.5	2810	12.5	2275	10.1
84	2134	943	4.2	0.47	11.9	703	3.1	471	2.1	1720	7.7	3253	14.5	2993	13.3	2346	10.4	1915	8.5
96	2438	823	3.7	0.61	15.5	541	2.4	365	1.6	1391	6.2	2911	12.9	2602	11.6	2020	9.0	1655	7.4
108	2743	733	3.3	0.78	19.8	422	1.9	281	1.2	1156	5.1	2645	11.8	2275	10.1	1776	7.9	1448	6.4
120	3048	663	2.9	0.96	24.4	341	1.5	233	1.0	978	4.4	2431	10.8	2020	9.0	1577	7.0	**	**
144	3658	553	2.5	1.39	35.3	241	1.1	162	0.7									$**\frac{KL}{r} > 200$	
168	4267	473	2.1	1.88	47.8	172	0.8	122	0.5										
192	4877	415	1.8	2.45	62.2	131	0.6	91	0.4										
216	5486	362	1.6	3.06	77.7	111	0.5	72	0.3										
240	6096	332	1.5	3.85	97.8	92	0.4	63	0.3										

NOTES

- Long spans may have to be braced to prevent rotation and twist.
- Beam loading data already includes the weight of the member. This weight will have to be deducted in order to arrive at the net allowable load said beam span will carry.
- Maximum allowable uniformly distributed loads are listed for simple spans consisting of a beam on two supports. If load is to be concentrated at center of span, multiply given load by 0.5 and corresponding deflection figure by 0.8.

VERSABAR CORPORATION

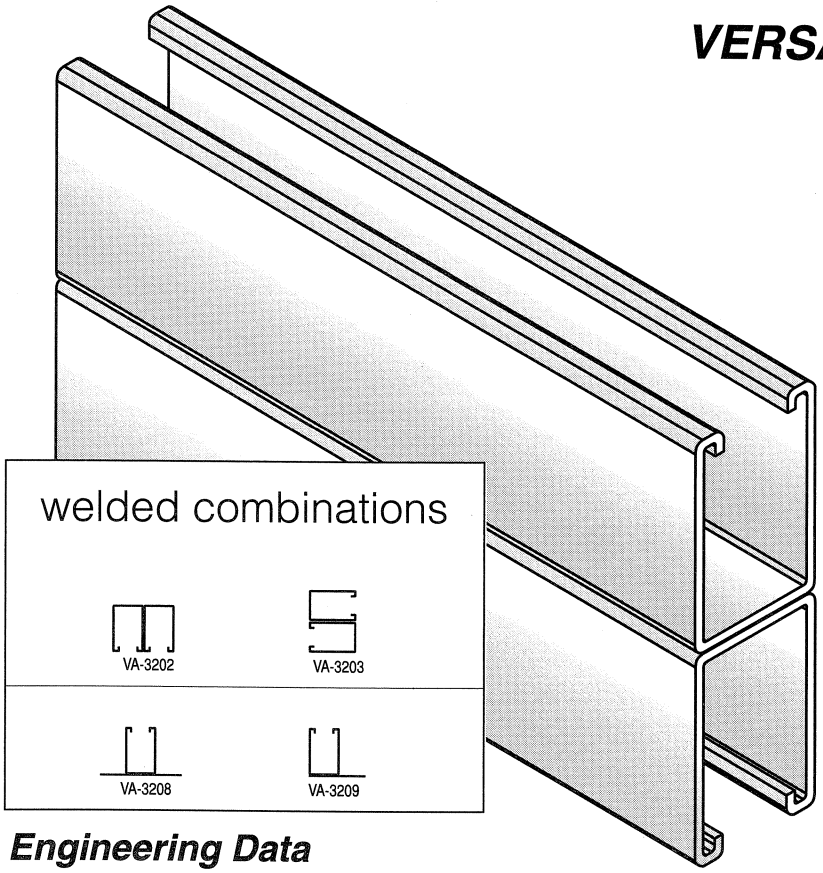

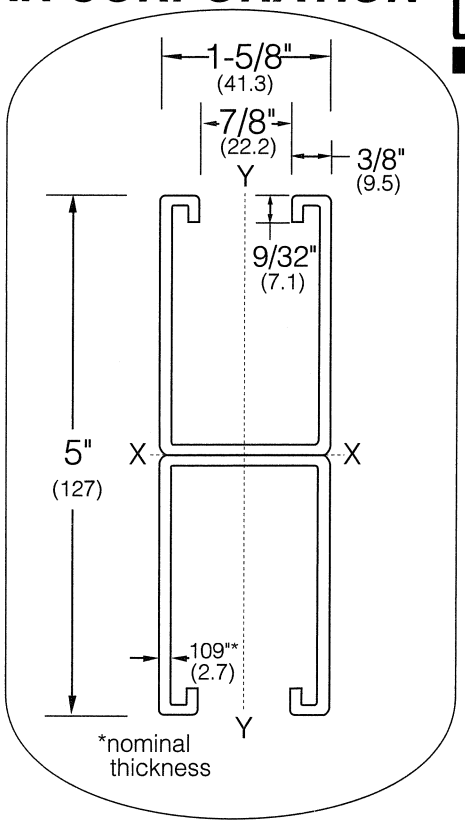

Engineering Data

elements of sections

VA-3201

12 ga. **Wgt. Per L.F.** **4.94 lbs.** (Kg. Per M) (7.35)

Sectional Area	
sq. in.	cm^2
1.453	9.37

X-X *axis*	Moment of inertia	Section modulus	Radius of gyration
	2.8132 In. ^{4}	1.1541 In. ^{3}	1.402 In.
	117.09 cm. ^{4}	18.91 cm. ^{3}	3.56 cm.
Y-Y *axis*	**Moment of inertia**	**Section modulus**	**Radius of gyration**
	.6611 In. ^{4}	.8137 In. ^{3}	.679 In.
	27.52 cm. ^{4}	13.33 cm. ^{3}	1.72 cm.

beam loading data										column loading data									
Span or Unbraced Column Height		Maximum Allowable Uniform Loading		Deflection at Uniform Loading		Uniform Loading at Deflections				Maximum Allowable Loading at Slot Face K=.80		Maximum Allowable Column Load Applied at Center of Gravity							
						Span/240		Span/360				K=.65		K=.80		K=1.0		K=1.2	
in.	(mm)	Lbs.	kN	in.	(mm)	Lbs.	kN	Lbs.	kN	Lbs.	kN	Lbs.	kN	Lbs.	kN	Lbs.	kN	Lbs.	kN
24	610	4200	18.7	0.01	0.3	4200	18.7	4200	18.7	7958	35.4	20659	91.9	20523	91.3	20301	90.3	20025	89.1
36	914	4200	18.7	0.03	0.8	4200	18.7	4200	18.7	7850	34.9	20326	90.4	20025	89.1	19515	86.8	18895	84.1
48	1219	4200	18.7	0.08	2.0	4200	18.7	4200	18.7	7690	34.2	19870	88.4	19326	86.0	18420	81.9	17318	77.0
60	1524	3872	17.2	0.13	3.3	3872	17.2	3872	17.2	6945	30.9	19271	85.7	18415	81.9	17020	75.7	15285	68.0
72	1829	3221	14.3	0.19	4.8	3221	14.3	3221	14.3	5336	23.7	18541	82.5	17325	77.1	15281	68.0	12810	57.0
84	2134	2765	12.3	0.26	6.6	2765	12.3	2511	11.2	4178	18.6	17678	78.6	16015	71.2	13251	58.9	9892	44.0
96	2438	2421	10.8	0.34	8.6	2421	10.8	1922	8.5	3329	14.8	16690	74.2	14503	64.5	10892	48.5	7571	33.7
108	2743	2152	9.6	0.43	10.9	2152	9.6	1525	6.8	2695	12.0	15561	69.2	12801	56.9	8625	38.4	5982	26.6
120	3048	1931	8.6	0.52	13.2	1841	8.2	1234	5.5	2208	9.8	14296	63.6	10892	48.5	6972	31.0	**	**
144	3658	1615	7.2	0.75	19.1	1283	5.7	856	3.8									$**\frac{KL}{r} > 200$	
168	4267	1385	6.2	1.03	26.2	942	4.2	631	2.8										
192	4877	1215	5.4	1.34	34.0	721	3.2	489	2.2										
216	5486	1075	4.8	1.69	42.9	576	2.6	382	1.7										
240	6096	972	4.3	2.11	53.6	462	2.1	311	1.4										

(Uniform beam loading on 24" and 36" spans limited by weld shear.)

NOTES

- Long spans may have to be braced to prevent rotation and twist.
- Beam loading data already includes the weight of the member. This weight will have to be deducted in order to arrive at the net allowable load said beam span will carry.
- Maximum allowable uniformly distributed loads are listed for simple spans consisting of a beam on two supports. If load is to be concentrated at center of span, multiply given load by 0.5 and corresponding deflection figure by 0.8.

VERSABAR CORPORATION

Produced and stocked in the following finishes and materials:					
●	●	●	●	●	○
G-90 Galv.	Green	Aluminum	H.R.P.O.	SS 304	SS 316

Note: Perforated channel has a reduced loading capacity, see introduction pages 6 & 7.

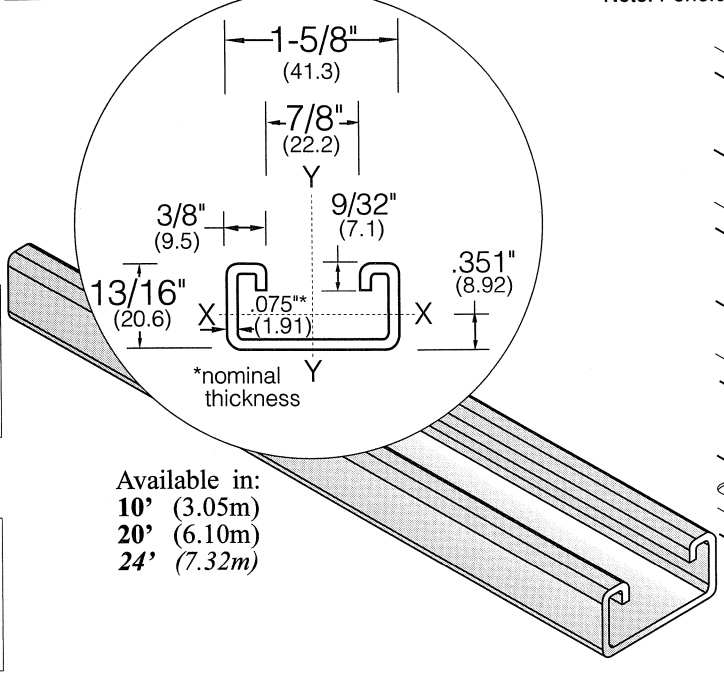

Available in:
10' (3.05m)
20' (6.10m)
24' *(7.32m)*

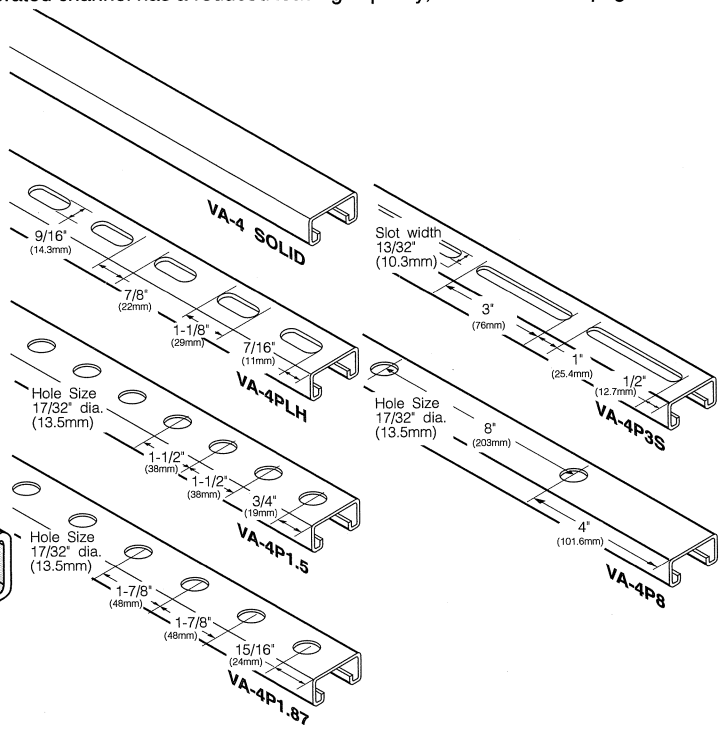

Engineering Data

elements of sections

VA-4

14 ga. **Wgt. Per L.F.** **.97 lbs.** (Kg. Per M) (1.44)

Sectional Area	
sq. in.	cm^2
.285	1.84

X-X *axis*	Moment of inertia	Section modulus	Radius of gyration
	.0262 In. ^{4}	.0558 In. ^{3}	.298 In.
	1.09 cm. ^{4}	.91 cm. ^{3}	.75 cm.
Y-Y *axis*	**Moment of inertia**	**Section modulus**	**Radius of gyration**
	.1096 In. ^{4}	.1348 In. ^{3}	.609 In.
	4.56 cm. ^{4}	2.21 cm. ^{3}	1.54 cm.

beam loading data												column loading data									
Span or Unbraced Column Height		Maximum Allowable Uniform Loading		Deflection at Uniform Loading		Uniform Loading at Deflections				Maximum Allowable Loading at Slot Face K=.80		Maximum Allowable Column Load Applied at Center of Gravity							
						Span/240		Span/360				K=.65		K=.80		K=1.0		K=1.2	
in.	(mm)	Lbs.	kN	in.	(mm)	Lbs.	kN	Lbs.	kN	Lbs.	kN	Lbs.	kN	Lbs.	kN	Lbs.	kN	Lbs.	kN
24	610	466	2.1	0.11	2.7	431	1.9	288	1.3	1689	7.5	5760	25.6	5462	24.3	4970	22.1	4298	19.1
36	914	312	1.4	0.24	6.2	192	0.9	127	0.6	1420	6.3	5041	22.4	4298	19.1	3072	13.7	2132	9.5
48	1219	231	1.0	0.43	11.0	108	0.5	73	0.3	1100	4.9	3918	17.4	2701	12.0	1729	7.7	1200	5.3
60	1524	187	0.8	0.68	17.2	70	0.3	47	0.2	880	3.9	2620	11.7	1722	7.7	**	**	**	**
72	1829	154	0.7	0.97	24.7	49	0.2	33	0.1	650	2.9	1819	8.1	1195	5.3	**	**	**	**
84	2134	135	0.6	1.32	33.6	35	0.2	22	0.1	510	2.3	1335	5.9	**	**	**	**		
96	2438	117	0.5	1.73	43.9	28	0.1	18	0.1	380	1.7	**	**	**	**				
108	2743	103	0.5	2.19	55.6	21	0.1	12	0.1	300	1.3	**	**	**	**				
120	3048	92	0.4	2.70	68.7	17	0.1	8	0.0	210	0.9	**	**						

$**\frac{KL}{r} > 200$

NOTES

- Long spans may have to be braced to prevent rotation and twist.
- Beam loading data already includes the weight of the member. This weight will have to be deducted in order to arrive at the net allowable load said beam span will carry.
- Maximum allowable uniformly distributed loads are listed for simple spans consisting of a beam on two supports. If load is to be concentrated at center of span, multiply given load by 0.5 and corresponding deflection figure by 0.8.

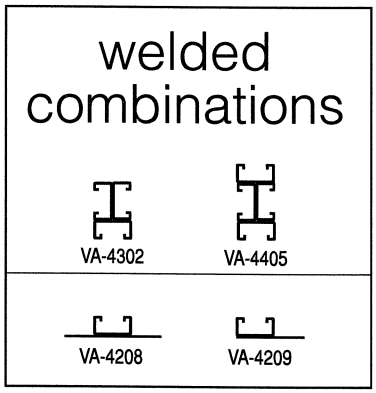

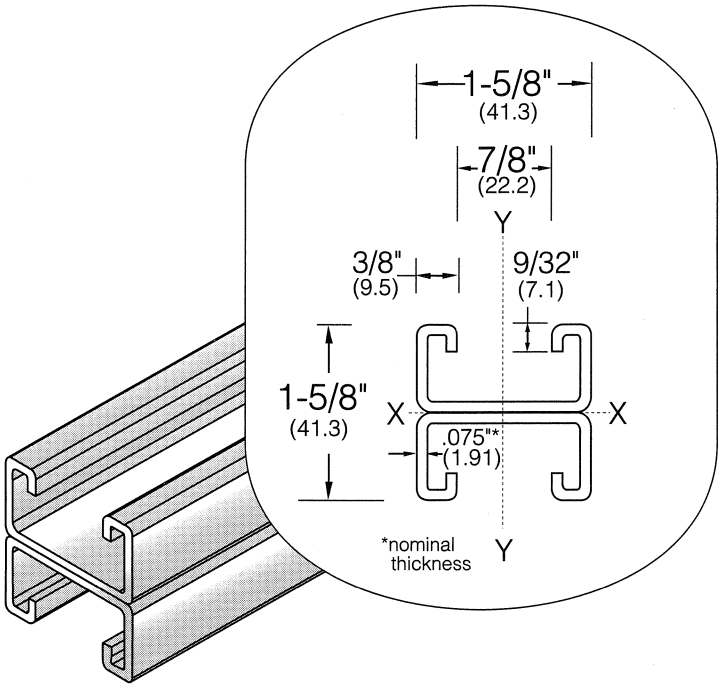

Engineering Data

elements of sections

VA-4201

14 ga. **Wgt. Per L.F.** (Kg. Per M) **1.94 lbs.** (2.89)

Sectional Area	
sq. in.	cm^2
.571	3.68

X-X *axis*	Moment of inertia	Section modulus	Radius of gyration
	.1217 In. ^{4}	.1498 In. ^{3}	.454 In.
	5.06 cm. ^{4}	2.45 cm. ^{3}	1.15 cm.
Y-Y *axis*	**Moment of inertia**	**Section modulus**	**Radius of gyration**
	.2191 In. ^{4}	.2697 In. ^{3}	.609 In.
	9.12 cm. ^{4}	4.42 cm. ^{3}	1.54 cm.

beam loading data										column loading data											
Span or Unbraced Column Height		Maximum Allowable Uniform Loading		Deflection at Uniform Loading		Uniform Loading at Deflections				Maximum Allowable Loading at Slot Face K=.80		Maximum Allowable Column Load Applied at Center of Gravity							
						Span/240		Span/360				K=.65		K=.80		K=1.0		K=1.2	
in.	(mm)	Lbs.	kN	in.	(mm)	Lbs.	kN	Lbs.	kN	Lbs.	kN	Lbs.	kN	Lbs.	kN	Lbs.	kN	Lbs.	kN
24	610	869	3.9	0.04	1.1	869	3.9	869	3.9	3300	14.7	12210	54.3	11821	52.6	11312	50.3	10682	47.5
36	914	833	3.7	0.14	3.6	833	3.7	592	2.6	2850	12.7	11380	50.6	10803	48.1	9714	43.2	8405	37.4
48	1219	625	2.8	0.25	6.4	498	2.2	333	1.5	2700	12.0	10420	46.4	9317	41.4	7402	32.9	5295	23.6
60	1524	495	2.2	0.39	9.9	321	1.4	212	0.9	2265	10.1	9208	41.0	7409	33.0	4910	21.8	3362	15.0
72	1829	418	1.9	0.56	14.3	222	1.0	147	0.7	1920	8.5	7620	33.9	5302	23.6	3408	15.2	2350	10.5
84	2134	358	1.6	0.77	19.5	165	0.7	112	0.5	1602	7.1	5902	26.3	3925	17.5	2480	11.0	**	**
96	2438	313	1.4	1.00	25.4	123	0.5	80	0.4	1401	6.2	4521	20.1	2961	13.2	**	**	**	**
108	2743	278	1.2	1.27	32.2	96	0.4	64	0.3	1220	5.4	3602	16.0	2380	10.6	**	**	**	**
120	3048	249	1.1	1.56	39.7	70	0.3	55	0.2	931	4.1	2910	12.9	**	**	**	**	**$\frac{KL}{r}$ >200	

(Uniform beam loading on 24" and 36" spans limited by weld shear.)

NOTES

- Long spans may have to be braced to prevent rotation and twist.
- Beam loading data already includes the weight of the member. This weight will have to be deducted in order to arrive at the net allowable load said beam span will carry.
- Maximum allowable uniformly distributed loads are listed for simple spans consisting of a beam on two supports. If load is to be concentrated at center of span, multiply given load by 0.5 and corresponding deflection figure by 0.8.

VERSABAR CORPORATION

Produced and stocked in the following finishes and materials:					
●	●	○	○	●	○
G-90 Galv.	Green	Aluminum	H.R.P.O.	SS 304	SS 316

Note: Perforated channel has a reduced loading capacity, see introduction pages 6 & 7.

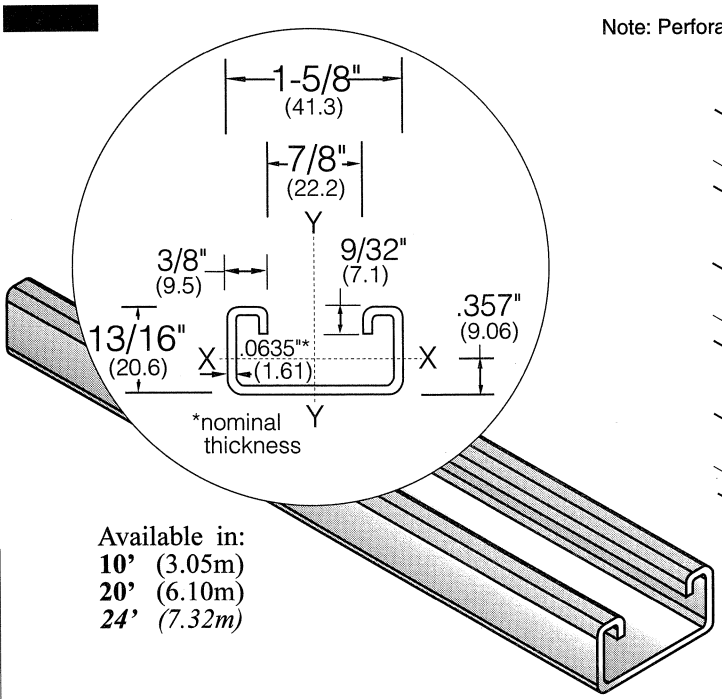

Available in:
10' (3.05m)
20' (6.10m)
24' *(7.32m)*

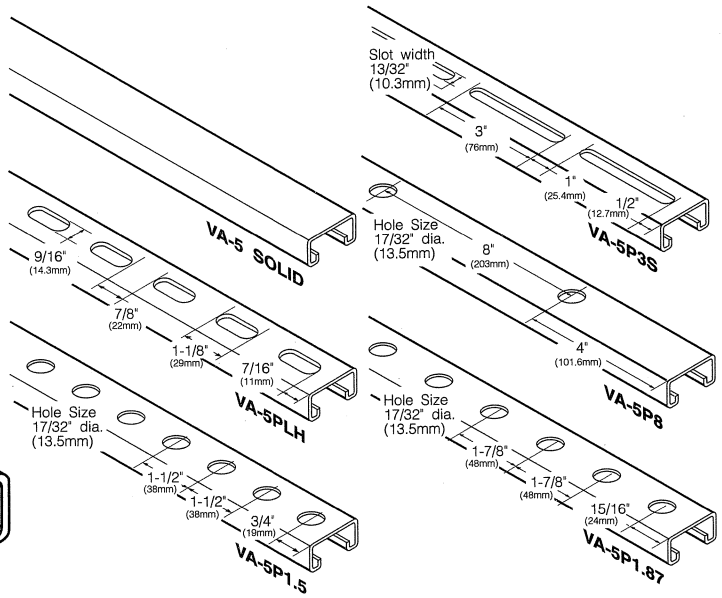

Engineering Data

elements of sections

VA-5

16 ga. **Wgt. Per L.F.** **.82 lbs.** (Kg. Per M) (1.2)

Sectional Area	
sq. in.	cm^2
.239	1.50

	Moment of inertia	Section modulus	Radius of gyration
X-X *axis*	.023 In.^{4} / .96 cm.^{4}	.048 In.^{3} / .79 cm.^{3}	.308 In. / .78 cm.
Y-Y *axis*	.091 In.^{4} / 3.80 cm.^{4}	.112 In.^{3} / 1.80 cm.^{3}	.617 In. / 1.60 cm.

beam loading data										column loading data									
Span or Unbraced Column Height		Maximum Allowable Uniform Loading		Deflection at Uniform Loading		Uniform Loading at Deflections				Maximum Allowable Loading at Slot Face		Maximum Allowable Column Load Applied at Center of Gravity							
						Span/240		Span/360		K=.80		K=.65		K=.80		K=1.0		K=1.2	
in.	(mm)	Lbs.	kN	in.	(mm)	Lbs.	kN	Lbs.	kN	Lbs.	kN	Lbs.	kN	Lbs.	kN	Lbs.	kN	Lbs.	kN
24	610	400	1.8	0.11	2.7	370	1.6	247	1.1	1375	6.1	3718	16.5	3672	16.3	3600	16.0	3502	15.6
36	914	268	1.2	0.24	6.2	162	0.7	102	0.5	988	4.4	2065	9.2	1951	8.7	1871	8.3	1760	7.8
48	1219	195	0.9	0.43	10.9	90	0.4	60	0.3	682	3.0	1125	5.0	1060	4.7	1040	4.6	992	4.4
60	1524	152	0.7	0.66	16.8	55	0.2	38	0.2	492	2.2	710	3.2	698	3.1	620	2.8	**	**
72	1829	125	0.6	0.95	24.1	38	0.2	26	0.1	375	1.7	489	2.2	481	2.1	**	**	**	**
84	2134	102	0.5	1.26	32.0	28	0.1	18	0.1	**	**	361	1.6	**	**	**	**		
96	2438	95	0.4	1.72	43.7	20	0.1	13	0.1	**	**	**	**	**	**				
108	2743	85	0.4	2.19	55.6	16	0.1	9	0.0	**	**	**	**	**	**				
120	3048	75	0.3	2.68	68.1	12	0.1			**	**	**	**						

$**\frac{KL}{r} > 200$

NOTES

- Long spans may have to be braced to prevent rotation and twist.
- Beam loading data already includes the weight of the member. This weight will have to be deducted in order to arrive at the net allowable load said beam span will carry.
- Maximum allowable uniformly distributed loads are listed for simple spans consisting of a beam on two supports. If load is to be concentrated at center of span, multiply given load by 0.5 and corresponding deflection figure by 0.8.

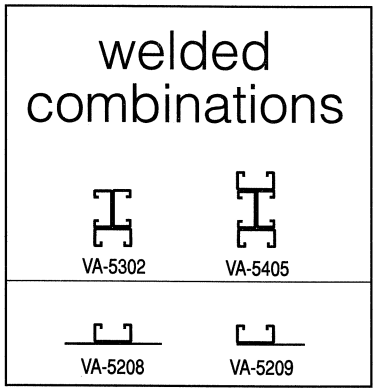

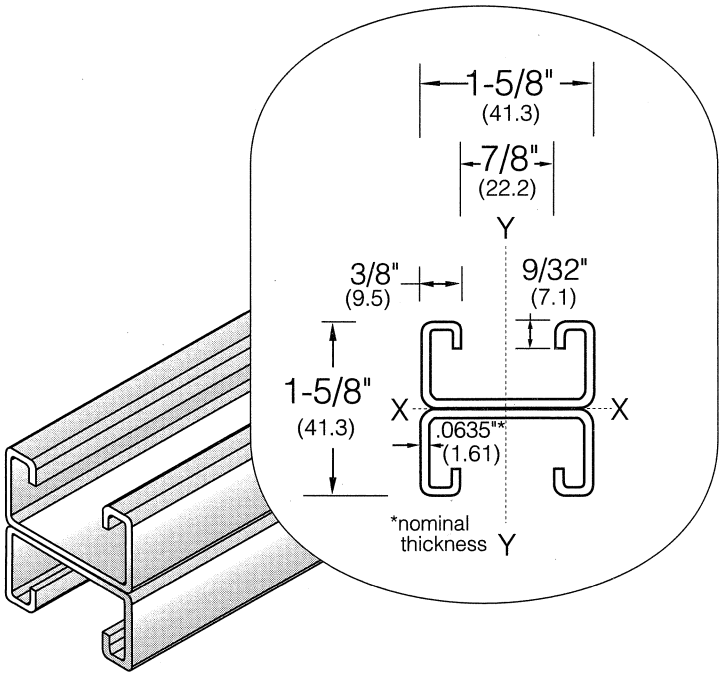

Engineering Data

elements of sections

VA-5201

16 ga. Wgt. Per L.F. (Kg. Per M) **1.64 lbs.** (2.4)

Sectional Area	
sq. in.	cm^2
.478	3.10

X-X *axis*	Moment of inertia	Section modulus	Radius of gyration
	.101 In. ^{4}	.125 In. ^{3}	.460 In.
	4.20 cm. ^{4}	2.00 cm. ^{3}	1.20 cm.
Y-Y *axis*	**Moment of inertia**	**Section modulus**	**Radius of gyration**
	.182 In. ^{4}	.224 In. ^{3}	.617 In.
	7.60 cm. ^{4}	3.70 cm. ^{3}	1.60 cm.

beam loading data										column loading data											
Span or Unbraced Column Height		Maximum Allowable Uniform Loading		Deflection at Uniform Loading		Uniform Loading at Deflections				Maximum Allowable Loading at Slot Face		Maximum Allowable Column Load Applied at Center of Gravity									
						Span/240		Span/360		K=.80		K=.65		K=.80		K=1.0		K=1.2	
in.	(mm)	Lbs.	kN	in.	(mm)	Lbs.	kN	Lbs.	kN	Lbs.	kN	Lbs.	kN	Lbs.	kN	Lbs.	kN	Lbs.	kN
24	610	605	2.7	0.04	1.1	605	2.7	605	2.7	2640	11.7	9970	44.3	9760	43.4	9400	41.8	8965	39.9
36	914	605	2.7	0.14	3.6	605	2.7	485	2.2	2430	10.8	9450	42.0	8958	39.8	8130	36.2	7120	31.7
48	1219	515	2.3	0.25	6.4	402	1.8	275	1.2	2190	9.7	8710	38.7	7820	34.8	6320	28.1	4610	20.5
60	1524	415	1.8	0.40	10.2	255	1.1	172	0.8	1910	8.5	7740	34.4	6340	28.2	4230	18.8	2950	13.1
72	1829	340	1.5	0.57	14.5	178	0.8	110	0.5	1620	7.2	6540	29.1	4600	20.5	2940	13.1	2040	9.1
84	2134	290	1.3	0.78	19.8	135	0.6	82	0.4	1360	6.0	5100	22.7	3390	15.1	2150	9.6	**	**
96	2438	250	1.1	1.01	25.7	95	0.4	61	0.3	1160	5.2	3920	17.4	2595	11.5	**	**	**	**
108	2743	220	1.0	1.27	32.3	75	0.3	41	0.2	1000	4.4	3100	13.8	2020	9.0	**	**	**	**
120	3048	200	0.9	1.59	40.4	65	0.3	32	0.1	**	**	2500	11.1	**	**	**	**	**$\frac{KL}{r}$ >200	

(Uniform beam loading on 24" and 36" spans limited by weld shear.)

NOTES

- Long spans may have to be braced to prevent rotation and twist.
- Beam loading data already includes the weight of the member. This weight will have to be deducted in order to arrive at the net allowable load said beam span will carry.
- Maximum allowable uniformly distributed loads are listed for simple spans consisting of a beam on two supports. If load is to be concentrated at center of span, multiply given load by 0.5 and corresponding deflection figure by 0.8.

VERSABAR CORPORATION

Produced and stocked in the following finishes and materials:					
●	○	○	●	○	○
G-90 Galv.	Green	Aluminum	H.R.P.O.	SS 304	SS 316

Note: Perforated channel has a reduced loading capacity, see introduction pages 6 & 7.

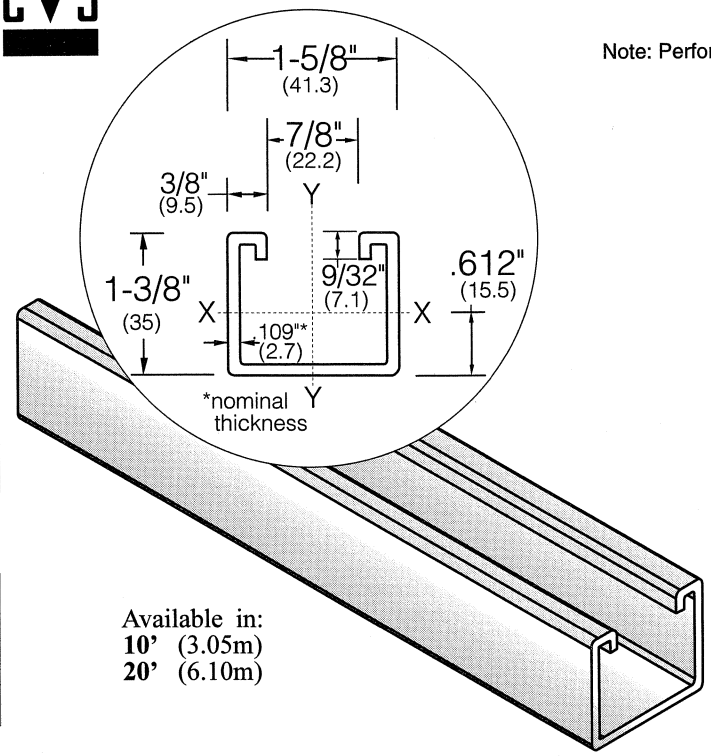

Available in:
10' (3.05m)
20' (6.10m)

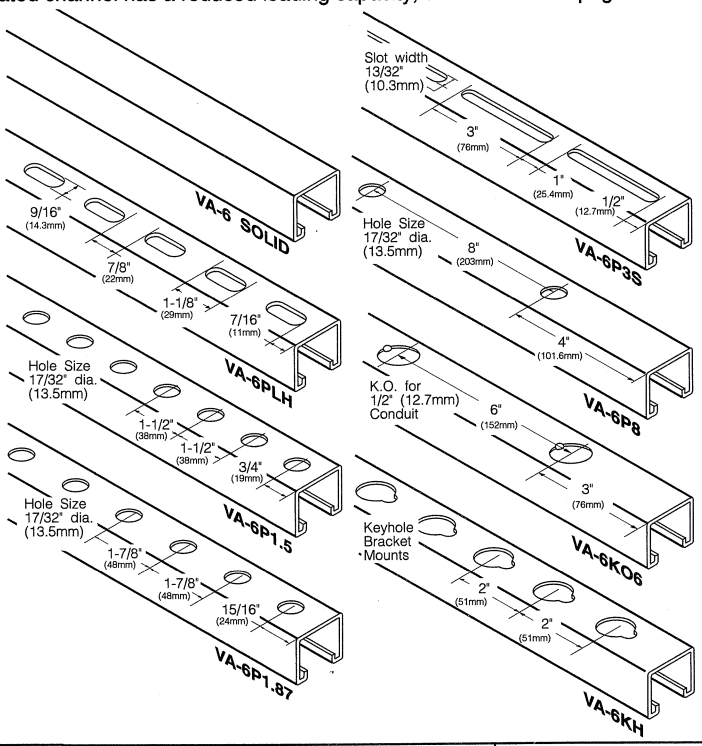

Engineering Data

elements of sections

VA-6

12 ga. Wgt. Per L.F. **1.7 lbs.** (Kg. Per M) (2.53)

Sectional Area	
sq. in.	cm^2
.500	3.23

	Moment of inertia	Section modulus	Radius of gyration
X-X *axis*	.1209 In.^{4} / 5.03 cm.^{4}	.1559 In.^{3} / 2.55 cm.^{3}	.493 In. / 1.25 cm.
Y-Y *axis*	.2043 In.^{4} / 8.50 cm.^{4}	.2515 In.^{3} / 4.12 cm.^{3}	.640 In. / 1.62 cm.

beam loading data

Span or Unbraced Column Height		Maximum Allowable Uniform Loading		Deflection at Uniform Loading		Uniform Loading at Deflections Span/240		Uniform Loading at Deflections Span/360	
in.	(mm)	Lbs.	kN	in.	(mm)	Lbs.	kN	Lbs.	kN
24	610	1298	5.8	0.07	1.7	1298	5.8	1298	5.8
36	914	865	3.8	0.15	3.7	865	3.8	588	2.6
48	1219	651	2.9	0.26	6.7	494	2.2	329	1.5
60	1524	521	2.3	0.41	10.4	318	1.4	210	0.9
72	1829	432	1.9	0.59	15.0	221	1.0	148	0.7
84	2134	372	1.7	0.80	20.4	161	0.7	109	0.5
96	2438	324	1.4	1.05	26.6	123	0.5	82	0.4
108	2743	291	1.3	1.33	33.7	98	0.4	68	0.3
120	3048	260	1.2	1.64	41.6	80	0.4	52	0.2
144	3658	219	1.0	2.40	61.0	59	0.3	38	0.2
168	4267	181	0.8	3.11	79.0	40	0.2	29	0.1
192	4877	159	0.7	4.13	104.9	28	0.1		
216	5486	141	0.6	5.15	130.8				
240	6096	131	0.6	6.56	166.6				

column loading data

Maximum Allowable Loading at Slot Face K=.80		Maximum Allowable Column Load Applied at Center of Gravity K=.65		K=.80		K=1.0		K=1.2	
Lbs.	kN	Lbs.	kN	Lbs.	kN	Lbs.	kN	Lbs.	kN
3129	13.9	8892	39.6	8802	39.2	8402	37.4	7648	34.0
2850	12.7	7531	33.5	7315	32.5	6592	29.3	5429	24.1
2415	10.7	6402	28.5	5995	26.7	4781	21.3	3871	17.2
2101	9.3	5503	24.5	4778	21.3	4002	17.8	3002	13.4
1875	8.3	4710	21.0	3872	17.2	2993	13.3	2415	10.7
1685	7.5	4109	18.3	3245	14.4	2492	11.1	**	**
1452	6.5	3532	15.7	2776	12.3	1991	8.9	**	**
1285	5.7	3081	13.7	2410	10.7	**	**	**	**
1102	4.9	2720	12.1	1991	8.9	**	**	**	**
								$**\frac{KL}{r} > 200$	

NOTES

- Long spans may have to be braced to prevent rotation and twist.
- Beam loading data already includes the weight of the member. This weight will have to be deducted in order to arrive at the net allowable load said beam span will carry.
- Maximum allowable uniformly distributed loads are listed for simple spans consisting of a beam on two supports. If load is to be concentrated at center of span, multiply given load by 0.5 and corresponding deflection figure by 0.8.

VERSABAR CORPORATION

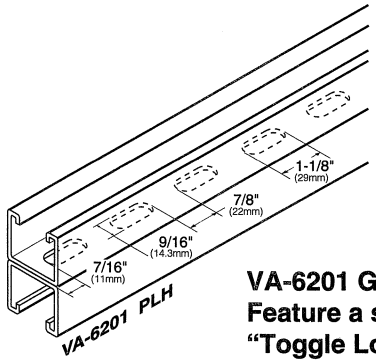

VA-6201 Galv. & VA-6201-PLH Galv. Feature a superior *non-welded* "Toggle Lock" design.

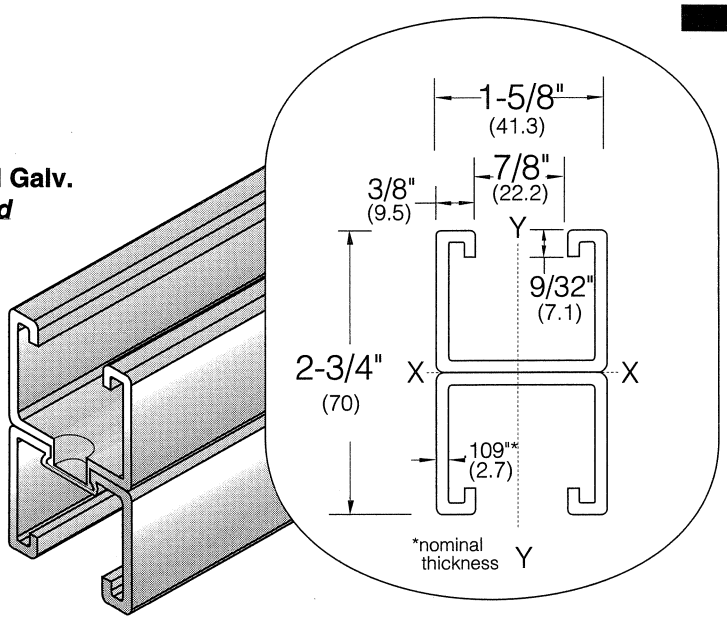

cross sectional cut of spot connection shown for illustrational purposes

welded combinations

Engineering Data

elements of sections

VA-6201

12 ga. Wgt. Per L.F. (Kg. Per M) **3.4 lbs.** (5.06)

Sectional Area	
sq. in.	cm^2
1.00	6.45

X-X *axis*	Moment of inertia	Section modulus	Radius of gyration
	.5997 In.^{4}	.4361 In.^{3}	.776 In.
	24.96 cm.^{4}	7.14 cm.^{3}	1.97 cm.
Y-Y *axis*	**Moment of inertia**	**Section modulus**	**Radius of gyration**
	.4087 In.^{4}	.5030 In.^{3}	.640 In.
	17.01 cm.^{4}	8.24 cm.^{3}	1.62 cm.

beam loading data										column loading data											
Span or Unbraced Column Height		Maximum Allowable Uniform Loading		Deflection at Uniform Loading		Uniform Loading at Deflections				Maximum Allowable Loading at Slot Face		Maximum Allowable Column Load Applied at Center of Gravity									
						Span/240		Span/360		K=.80		K=.65		K=.80		K=1.0		K=1.2	
in.	(mm)	Lbs.	kN	in.	(mm)	Lbs.	kN	Lbs.	kN	Lbs.	kN	Lbs.	kN	Lbs.	kN	Lbs.	kN	Lbs.	kN
24	610	2212	9.8	0.02	0.6	2212	9.8	2212	9.8	5663	25.2	21040	93.6	20810	92.6	20425	90.9	19962	88.8
36	914	2212	9.8	0.08	1.9	2212	9.8	2212	9.8	5482	24.4	20475	91.1	19963	88.8	19083	84.9	18024	80.2
48	1219	1816	8.1	0.15	3.8	1816	8.1	1629	7.2	5243	23.3	19685	87.6	18762	83.5	17215	76.6	15329	68.2
60	1524	1452	6.5	0.23	5.9	1452	6.5	1046	4.7	4720	21.0	18667	83.0	17225	76.6	14806	65.9	11859	52.8
72	1829	1209	5.4	0.33	8.5	1089	4.8	725	3.2	3451	15.4	17428	77.5	15342	68.2	11861	52.8	8318	37.0
84	2134	1035	4.6	0.45	11.5	798	3.5	533	2.4	2610	11.6	15962	71.0	13124	58.4	8796	39.1	6115	27.2
96	2438	903	4.0	0.59	15.0	612	2.7	406	1.8	2019	9.0	14265	63.5	10532	46.8	6742	30.0	4682	20.8
108	2743	802	3.6	0.75	19.0	482	2.1	323	1.4	1598	7.1	12341	54.9	8321	37.0	5326	23.7	**	**
120	3048	725	3.2	0.92	23.5	392	1.7	261	1.2	1292	5.7	10210	45.4	6742	30.0	4318	19.2	**	**
144	3658	598	2.7	1.33	33.8	269	1.2	178	0.8									$**\frac{KL}{r} > 200$	
168	4267	518	2.3	1.84	46.7	195	0.9	128	0.6										
192	4877	448	2.0	2.37	60.2	145	0.6	95	0.4										
216	5486	398	1.8	3.00	76.2	118	0.5	76	0.3										
240	6096	354	1.6	3.70	94.0	92	0.4	56	0.2										

(Uniform beam loading on 24" and 36" spans limited by weld shear.)

NOTES

- Long spans may have to be braced to prevent rotation and twist.
- Beam loading data already includes the weight of the member. This weight will have to be deducted in order to arrive at the net allowable load said beam span will carry.
- Maximum allowable uniformly distributed loads are listed for simple spans consisting of a beam on two supports. If load is to be concentrated at center of span, multiply given load by 0.5 and corresponding deflection figure by 0.8.

VERSABAR CORPORATION

Produced and stocked in the following finishes and materials:					
●	○	○	○	○	○
G-90 Galv.	Green	Aluminum	H.R.P.O.	SS 304	SS 316

Note: Perforated channel has a reduced loading capacity, see introduction pages 6 & 7.

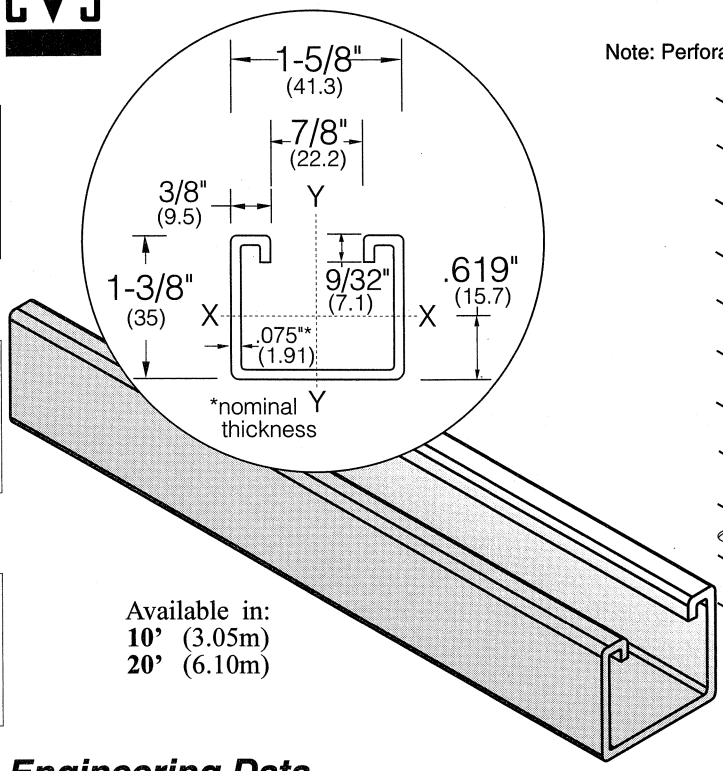

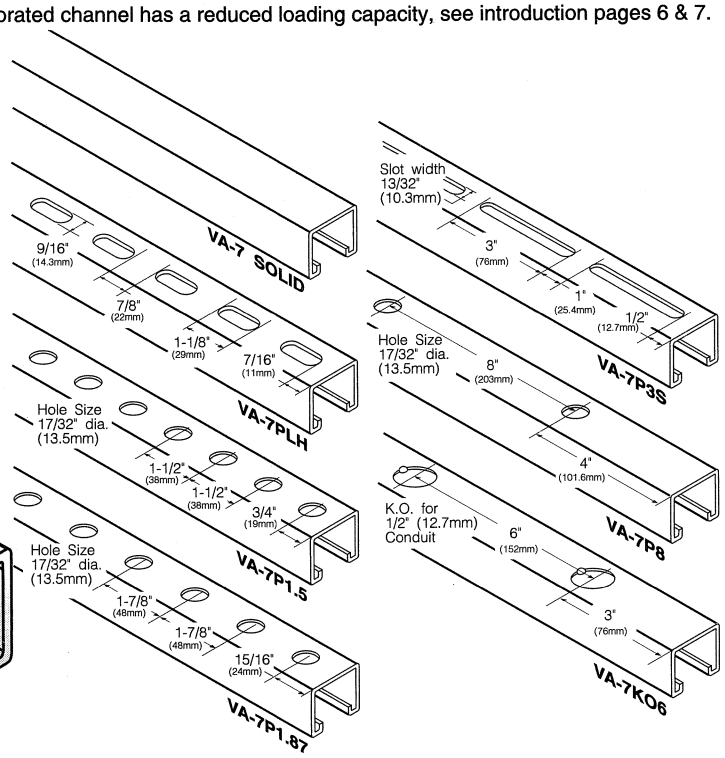

Engineering Data

elements of sections

VA-7

14 ga. Wgt. Per L.F. (Kg. Per M) 1.3 lbs. (1.936)

Sectional Area	
sq. in.	cm^2
.371	2.40

X-X *axis*	Moment of inertia	Section modulus	Radius of gyration
	.102 In.^{4}	.135 In.^{3}	.533 In.
	4.25 cm.^{4}	2.208 cm.^{3}	1.3513 cm.
Y-Y *axis*	**Moment of inertia**	**Section modulus**	**Radius of gyration**
	.151 In.^{4}	.187 In.^{3}	.425 In.
	6.28 cm.^{4}	3.058 cm.^{3}	1.0775 cm.

beam loading data										column loading data									
Span or Unbraced Column Height		Maximum Allowable Uniform Loading		Deflection at Uniform Loading		Uniform Loading at Deflections				Maximum Allowable Loading at Slot Face K=.80		Maximum Allowable Column Load Applied at Center of Gravity							
						Span/240		Span/360				K=.65		K=.80		K=1.0		K=1.2	
in.	(mm)	Lbs.	kN	in.	(mm)	Lbs.	kN	Lbs.	kN	Lbs.	kN	Lbs.	kN	Lbs.	kN	Lbs.	kN	Lbs.	kN
24	610	1012	4.5	0.07	1.7	1012	4.5	1012	4.5	2159	9.6	5068	22.5	5017	22.3	4621	20.6	3976	17.7
36	914	674	3.0	0.15	3.7	674	3.0	458	2.0	1966	8.7	4292	19.1	4169	18.5	3625	16.1	2823	12.6
48	1219	507	2.3	0.27	6.9	385	1.7	256	1.1	1666	7.4	3649	16.2	3417	15.2	2629	11.7	2012	8.9
60	1524	406	1.8	0.42	10.7	248	1.1	163	0.7	1449	6.4	3136	13.9	2723	12.1	2201	9.8	1561	6.9
72	1829	336	1.5	0.60	15.2	172	0.8	115	0.5	1293	5.8	2684	11.9	2207	9.8	1646	7.3	1255	5.6
84	2134	290	1.3	0.81	20.6	125	0.6	85	0.4	1162	5.2	2342	10.4	1849	8.2	1370	6.1	**	**
96	2438	252	1.1	1.06	26.9	95	0.4	63	0.3	1001	4.5	2013	9.0	1582	7.0	1095	4.9	**	**
108	2743	226	1.0	1.34	34.0	76	0.3	53	0.2	886	3.9	1756	7.8	1373	6.1	**	**	**	**
120	3048	202	0.9	1.65	41.9	62	0.3	40	0.2	760	3.4	1550	6.9	1134	5.0	**	**	**	**
																		$**\frac{KL}{r} > 200$	

NOTES

- Long spans may have to be braced to prevent rotation and twist.
- Beam loading data already includes the weight of the member. This weight will have to be deducted in order to arrive at the net allowable load said beam span will carry.
- Maximum allowable uniformly distributed loads are listed for simple spans consisting of a beam on two supports. If load is to be concentrated at center of span, multiply given load by 0.5 and corresponding deflection figure by 0.8.

welded combinations

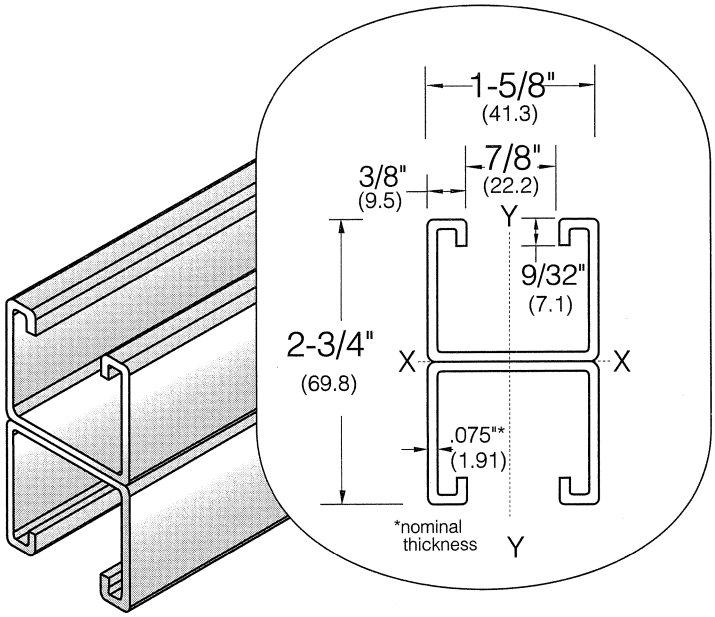

Engineering Data

elements of sections

VA-7201

14 ga. Wgt. Per L.F. 2.668 lbs (Kg. Per M) (3.97)

Sectional Area	
sq. in.	cm^2
.743	4.80

X-X *axis*	Moment of inertia	Section modulus	Radius of gyration
	.478 In. ^{4}	.347 In. ^{3}	.817 In.
	19.89 cm. ^{4}	5.68 cm. ^{3}	2.071 cm.
Y-Y *axis*	**Moment of inertia**	**Section modulus**	**Radius of gyration**
	.304 In. ^{4}	.374 In. ^{3}	.425 In.
	12.65 cm. ^{4}	6.11 cm. ^{3}	1.0775 cm.

beam loading data										column loading data											
Span or Unbraced Column Height		Maximum Allowable Uniform Loading		Deflection at Uniform Loading		Uniform Loading at Deflections				Maximum Allowable Loading at Slot Face		Maximum Allowable Column Load Applied at Center of Gravity									
						Span/240		Span/360		K=.80		K=.65		K=.80		K=1.0		K=1.2	
in.	(mm)	Lbs.	kN	in.	(mm)	Lbs.	kN	Lbs.	kN	Lbs.	kN	Lbs.	kN	Lbs.	kN	Lbs.	kN	Lbs.	kN
24	610	1273	5.7	0.02	0.6	1273	5.7	1273	5.7	4303	19.1	13044	58.0	13110	58.3	12867	57.2	12576	55.9
36	914	1273	5.7	0.08	1.9	1273	5.7	1273	5.7	4166	18.5	12694	56.5	12576	55.9	12022	53.5	11355	50.5
48	1219	1273	5.7	0.15	3.8	1273	5.7	1273	5.7	3984	17.7	12204	54.3	11820	52.6	10845	48.2	9657	43.0
60	1524	1132	5.0	0.24	6.1	1147	5.1	826	3.7	3587	16.0	11573	51.5	10851	48.3	9327	41.5	7471	33.2
72	1829	943	4.2	0.34	8.6	860	3.8	572	2.5	2622	11.7	10805	48.1	9665	43.0	7472	33.2	5240	23.3
84	2134	807	3.6	0.45	11.4	630	2.8	421	1.9	1983	8.8	9896	44.0	8268	36.8	5541	24.6	3852	17.1
96	2438	704	3.1	0.60	15.2	483	2.1	320	1.4	1534	6.8	8844	39.3	6635	29.5	4247	18.9	2949	13.1
108	2743	625	2.8	0.76	19.3	380	1.7	255	1.1	1214	5.4	7651	34.0	5242	23.3	3355	14.9	**	**
120	3048	565	2.5	0.93	23.6	309	1.4	206	0.9	981	4.4	6330	28.2	4247	18.9	2720	12.1	**	**
																		**$\frac{KL}{r}$ >200	

(Uniform beam loading on 24" and 36" spans limited by weld shear.)

NOTES

- Long spans may have to be braced to prevent rotation and twist.
- Beam loading data already includes the weight of the member. This weight will have to be deducted in order to arrive at the net allowable load said beam span will carry.
- Maximum allowable uniformly distributed loads are listed for simple spans consisting of a beam on two supports. If load is to be concentrated at center of span, multiply given load by 0.5 and corresponding deflection figure by 0.8.

VERSABAR CORPORATION

Produced and stocked in the following finishes and materials:					
●	○	○	○	○	○
G-90 Galv.	Green	Aluminum	H.R.P.O.	SS 304	SS 316

Note: Perforated channel has a reduced loading capacity, see introduction pages 6 & 7.

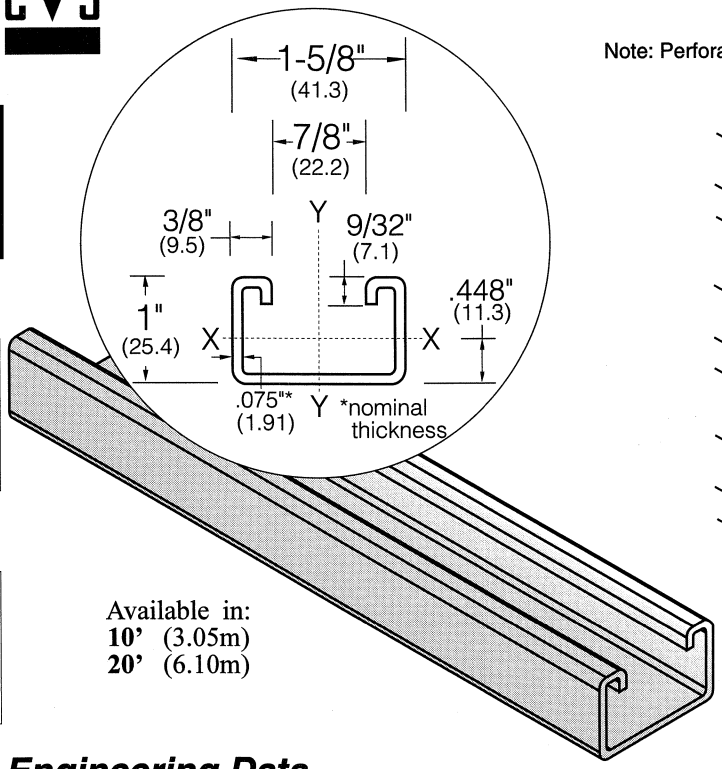

Available in:
10' (3.05m)
20' (6.10m)

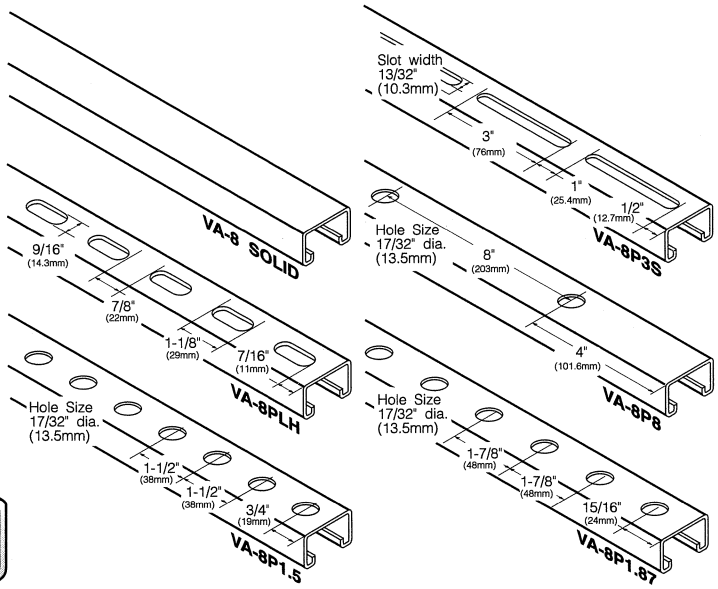

Engineering Data

elements of sections

VA-8

14 ga. Wgt. Per L.F. (Kg. Per M) **1.13 lbs.** (1.68)

Sectional Area	
sq. in.	cm^2
.318	2.04

	Moment of inertia	Section modulus	Radius of gyration
X-X *axis*	.044 In.^{4}	.078 In.^{3}	.348 In.
	1.83 cm.^{4}	1.27 cm.^{3}	.882 cm.
Y-Y *axis*	.121 In.^{4}	.149 In.^{3}	.396 In.
	5.04 cm.^{4}	2.43 cm.^{3}	1.00 cm.

beam loading data												column loading data									
Span or Unbraced Column Height		Maximum Allowable Uniform Loading		Deflection at Uniform Loading		Uniform Loading at Deflections				Maximum Allowable Loading at Slot Face		Maximum Allowable Column Load Applied at Center of Gravity									
						Span/240		Span/360		K=.80		K=.65		K=.80		K=1.0		K=1.2	
in.	(mm)	Lbs.	kN	in.	(mm)	Lbs.	kN	Lbs.	kN	Lbs.	kN	Lbs.	kN	Lbs.	kN	Lbs.	kN	Lbs.	kN
24	610	546	2.4	0.11	2.8	546	2.4	374	1.7	2166	9.6	4845	21.6	4548	20.2	4119	18.3	3588	16.0
36	914	390	1.7	0.23	5.8	234	1.0	156	0.7	1876	8.3	4332	19.3	3978	17.7	2739	12.2	2080	9.3
48	1219	250	1.1	0.42	10.7	136	0.6	93	0.4	1531	6.8	3819	17.0	3020	13.4	1870	8.3	1144	5.1
60	1524	210	0.9	0.64	16.3	93	0.4	56	0.2	1173	5.2	2793	12.4	1938	8.6	1127	5.0	**	**
72	1829	179	0.8	0.91	23.1	66	0.3	39	0.2	897	4.0	2052	9.1	1362	6.1	**	**	**	**
84	2134	156	0.7	1.23	31.2	46	0.2	31	0.1	690	3.1	1527	6.8	969	4.3	**	**	**	**
96	2438	132	0.6	1.60	40.6	37	0.2	25	0.1	586	2.6	1128	5.0	**	**	**	**		
108	2743	109	0.5	1.98	50.3	28	0.1	17	0.1	496	2.2	855	3.8	**	**				
120	3048	105	0.5	2.50	63.5	21	0.1	14	0.1	414	1.8	**	**	**	**				

$**\frac{KL}{r} > 200$

NOTES

- Long spans may have to be braced to prevent rotation and twist.
- Beam loading data already includes the weight of the member. This weight will have to be deducted in order to arrive at the net allowable load said beam span will carry.
- Maximum allowable uniformly distributed loads are listed for simple spans consisting of a beam on two supports. If load is to be concentrated at center of span, multiply given load by 0.5 and corresponding deflection figure by 0.8.

welded combinations

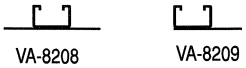

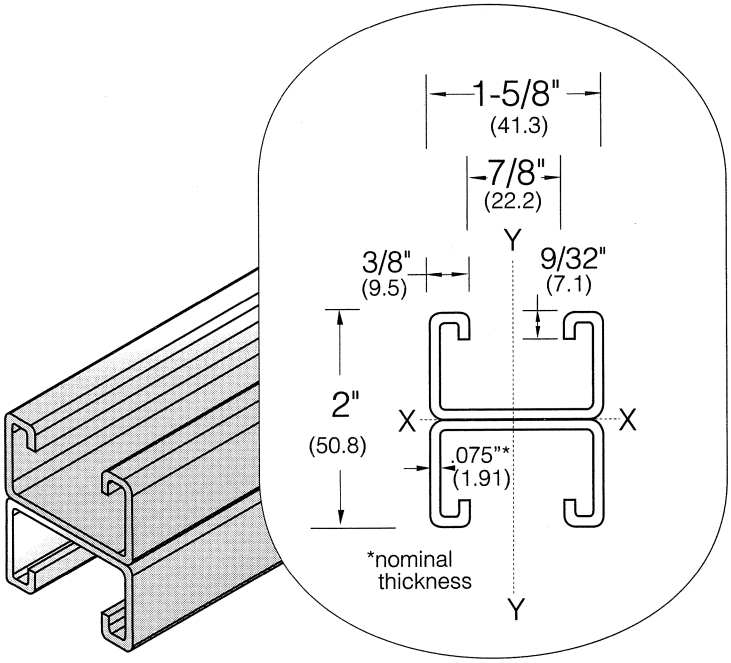

Engineering Data

elements of sections

VA-8201

14 ga. Wgt. Per L.F. (Kg. Per M) **2.20 lbs.** (3.276)

Sectional Area sq. in.	Sectional Area cm^2
.636	4.11

	Moment of inertia	Section modulus	Radius of gyration
X-X *axis*	.212 In.^{4} / 8.82 cm.^{4}	.212 In.^{3} / 3.46 cm.^{3}	.588 In. / 1.49 cm.
Y-Y *axis*	.242 In.^{4} / 10.07 cm.^{4}	.298 In.^{3} / 4.87 cm.^{3}	.396 In. / 1.00 cm.

beam loading data										column loading data											
Span or Unbraced Column Height		Maximum Allowable Uniform Loading		Deflection at Uniform Loading		Uniform Loading at Deflections				Maximum Allowable Loading at Slot Face		Maximum Allowable Column Load Applied at Center of Gravity									
						Span/240		Span/360		K=.80		K=.65		K=.80		K=1.0		K=1.2	
in.	(mm)	Lbs.	kN	in.	(mm)	Lbs.	kN	Lbs.	kN	Lbs.	kN	Lbs.	kN	Lbs.	kN	Lbs.	kN	Lbs.	kN
24	610	954	4.2	0.07	1.8	954	4.2	954	4.2	4028	17.9	11780	52.4	11340	50.4	10710	47.6	10395	46.2
36	914	954	4.2	0.10	2.5	954	4.2	845	3.8	3800	16.9	11160	49.6	10710	47.6	9450	42.0	8820	39.2
48	1219	834	3.7	0.20	5.1	829	3.7	553	2.5	3420	15.2	10540	46.9	9450	42.0	7560	33.6	6300	28.0
60	1524	663	2.9	0.32	8.1	529	2.4	347	1.5	3192	14.2	9300	41.4	7560	33.6	5670	25.2	3780	16.8
72	1829	553	2.5	0.46	11.7	363	1.6	244	1.1	2812	12.5	8060	35.9	6300	28.0	3780	16.8	2520	11.2
84	2134	475	2.1	0.62	15.7	268	1.2	173	0.8	2432	10.8	6820	30.3	4725	21.0	2520	11.2	1890	8.4
96	2438	413	1.8	0.81	20.6	205	0.9	134	0.6	2052	9.1	5580	24.8	3780	16.8	1890	8.4	**	**
108	2743	366	1.6	1.03	26.2	158	0.7	102	0.5	1748	7.8	4340	19.3	2520	11.2	1260	5.6	**	**
120	3048	327	1.5	1.27	32.3	126	0.6	86	0.4	1520	6.8	3100	13.8	1890	8.4	**	**	**	**
																		**$\frac{KL}{r}$ >200	

(Uniform beam loading on 24" and 36" spans limited by weld shear.)

NOTES

- Long spans may have to be braced to prevent rotation and twist.
- Beam loading data already includes the weight of the member. This weight will have to be deducted in order to arrive at the net allowable load said beam span will carry.
- Maximum allowable uniformly distributed loads are listed for simple spans consisting of a beam on two supports. If load is to be concentrated at center of span, multiply given load by 0.5 and corresponding deflection figure by 0.8.

VERSABAR CORPORATION

Produced and stocked in the following finishes and materials:					
●	●	○	●	○	○
G-90 Galv.	Green	Aluminum	H.R.P.O.	SS 304	SS 316

Note: Perforated channel has a reduced loading capacity, see introduction pages 6 & 7.

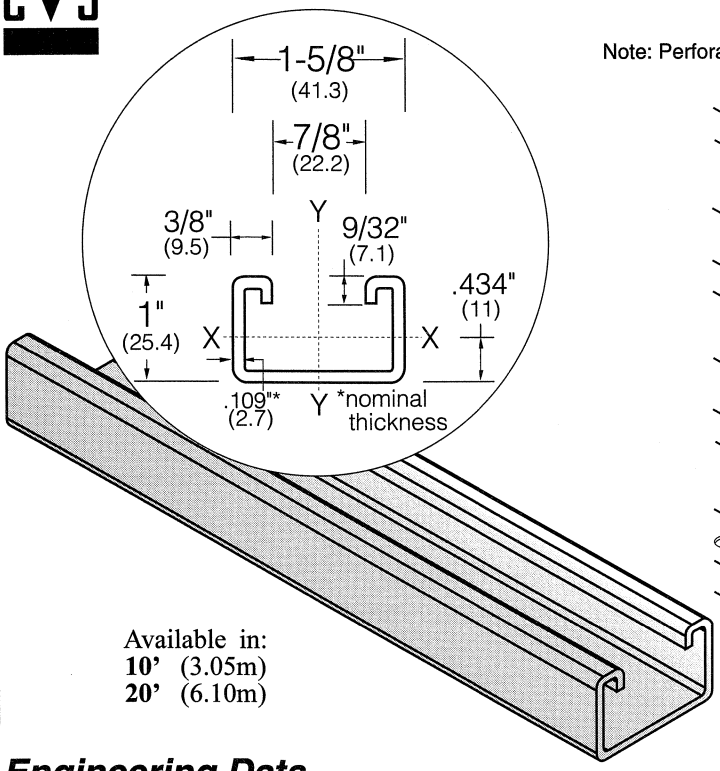

Available in:
10' (3.05m)
20' (6.10m)

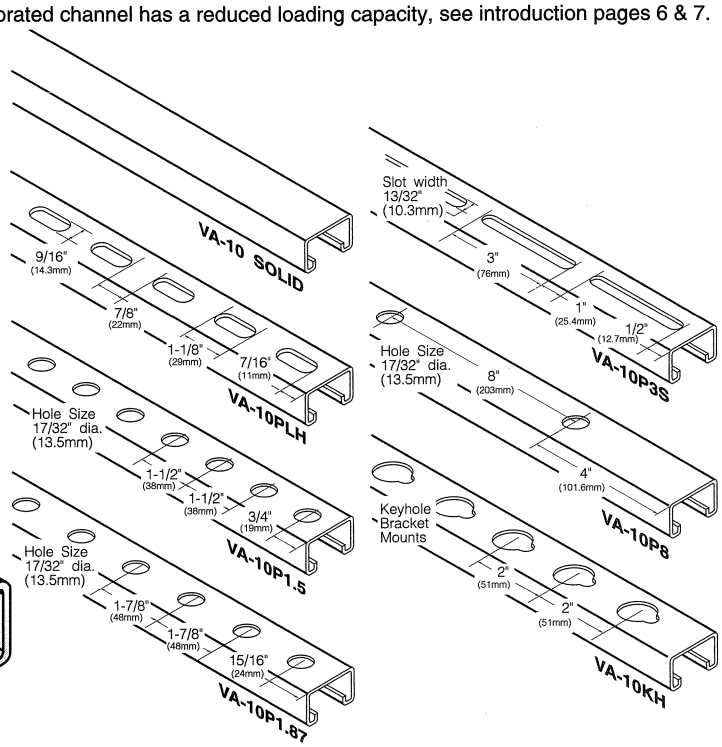

Engineering Data

elements of sections

VA-10

12 ga. **Wgt. Per L.F.** (Kg. Per M) **1.44 lbs.** (2.14)

Sectional Area	
sq. in.	cm^2
.424	2.73

	Moment of inertia	Section modulus	Radius of gyration
X-X *axis*	.0533 In.^{4}	.0923 In.^{3}	.356 In.
	2.22 cm.^{4}	1.51 cm.^{3}	.90 cm.
Y-Y *axis*	Moment of inertia	Section modulus	Radius of gyration
	.1598 In.^{4}	.1967 In.^{3}	.616 In.
	6.65 cm.^{4}	3.22 cm.^{3}	1.56 cm.

beam loading data												column loading data											
Span or Unbraced Column Height		Maximum Allowable Uniform Loading		Deflection at Uniform Loading		Uniform Loading at Deflections				Maximum Allowable Loading at Slot Face		Maximum Allowable Column Load Applied at Center of Gravity											
						Span/240		Span/360		K=.80		K=.65		K=.80		K=1.0		K=1.2			
in.	(mm)	Lbs.	kN	in.	(mm)	Lbs.	kN	Lbs.	kN	Lbs.	kN	Lbs.	kN	Lbs.	kN	Lbs.	kN	Lbs.	kN		
24	610	762	3.4	0.10	2.5	762	3.4	578	2.6	3141	14.0	8538	38.0	8133	36.2	7585	33.7	7047	31.3		
36	914	506	2.3	0.22	5.6	385	1.7	256	1.1	2721	12.1	7555	33.6	7048	31.4	5921	26.3	4333	19.3		
48	1219	379	1.7	0.40	10.2	216	1.0	143	0.6	2225	9.9	6787	30.2	5402	24.0	3509	15.6	2438	10.8		
60	1524	305	1.4	0.62	15.7	138	0.6	92	0.4	1719	7.6	5271	23.4	3509	15.6	2245	10.0	**	**		
72	1829	254	1.1	0.89	22.6	95	0.4	64	0.3	1349	6.0	3693	16.4	2438	10.8	**	**	**	**		
84	2134	219	1.0	1.20	30.5	70	0.3	47	0.2	1085	4.8	2712	12.1	1789	8.0	**	**	**	**		
96	2438	190	0.8	1.58	40.1	54	0.2	36	0.2	891	4.0	2077	9.2	**	**	**	**				
108	2743	170	0.8	1.95	49.5	42	0.2	29	0.1	742	3.3	1641	7.3	**	**						
120	3048	154	0.7	2.47	62.7	35	0.2	23	0.1	625	2.8	**	**	**	**						

$**\frac{KL}{r} > 200$

NOTES

- Long spans may have to be braced to prevent rotation and twist.
- Beam loading data already includes the weight of the member. This weight will have to be deducted in order to arrive at the net allowable load said beam span will carry.
- Maximum allowable uniformly distributed loads are listed for simple spans consisting of a beam on two supports. If load is to be concentrated at center of span, multiply given load by 0.5 and corresponding deflection figure by 0.8.

VERSABAR CORPORATION

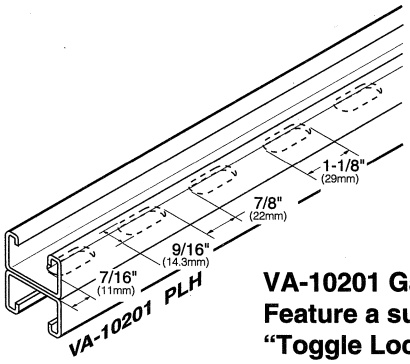

VA-10201 Galv. & VA-10201-PLH Galv. Feature a superior *non-welded* "Toggle Lock" design.

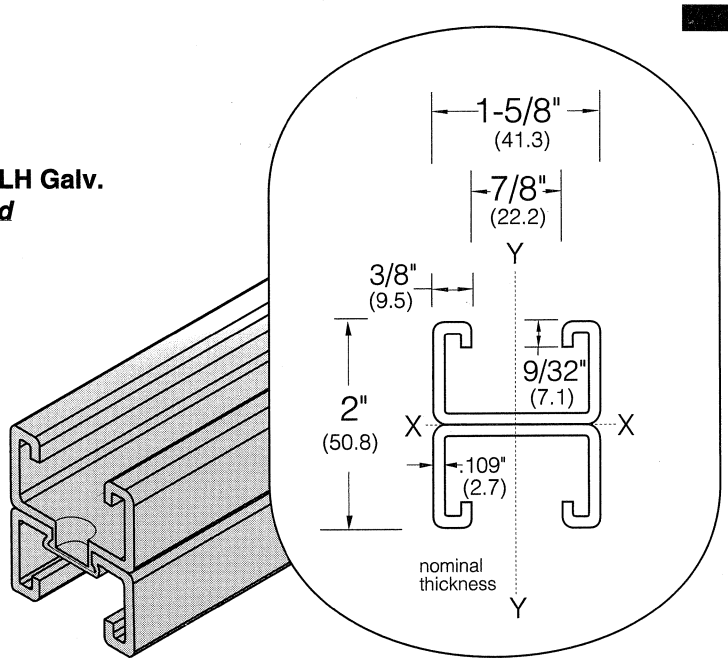

cross sectional cut of spot connection shown for illustrational purposes

welded combinations

VA-10208 VA-10209

Engineering Data

elements of sections

VA-10201

12 ga. Wgt. Per L.F. (Kg. Per M) 2.88 lbs. (4.28)

Sectional Area	
sq. in.	cm^2
.847	5.46

	Moment of inertia	Section modulus	Radius of gyration
X-X *axis*	.2570 In.^{4} 10.70 cm.^{4}	.2570 In.^{3} 4.21 cm.^{3}	.552 In. 1.40 cm.
Y-Y *axis*	.3196 In.^{4} 13.30 cm.^{4}	.3933 In.^{3} 6.44 cm.^{3}	.616 In. 1.56 cm.

beam loading data										column loading data											
Span or Unbraced Column Height		Maximum Allowable Uniform Loading		Deflection at Uniform Loading		Uniform Loading at Deflections				Maximum Allowable Loading at Slot Face		Maximum Allowable Column Load Applied at Center of Gravity									
						Span/240		Span/360		K=.80		K=.65		K=.80		K=1.0		K=1.2	
in.	(mm)	Lbs.	kN	in.	(mm)	Lbs.	kN	Lbs.	kN	Lbs.	kN	Lbs.	kN	Lbs.	kN	Lbs.	kN	Lbs.	kN
24	610	1585	7.1	0.04	1.0	1585	7.1	1585	7.1	5561	24.7	20190	89.8	19695	87.6	18761	83.5	17594	78.3
36	914	1425	6.3	0.11	2.9	1425	6.3	1245	5.5	5229	23.3	18951	84.3	18054	80.3	16475	73.3	14025	62.4
48	1219	1069	4.8	0.20	5.2	1049	4.7	701	3.1	4809	21.4	17595	78.3	16106	71.6	13795	61.4	11211	49.9
60	1524	855	3.8	0.32	8.1	672	3.0	448	2.0	4347	19.3	15989	71.1	13889	61.8	10621	47.2	7485	33.3
72	1829	713	3.2	0.46	11.6	466	2.1	309	1.4	3849	17.1	14185	63.1	11381	50.6	7475	33.3	5188	23.1
84	2134	611	2.7	0.62	15.8	342	1.5	227	1.0	3328	14.8	12125	53.9	8636	38.4	5399	24.0	3785	16.8
96	2438	533	2.4	0.81	20.7	262	1.2	175	0.8	2868	12.8	9998	44.5	6602	29.4	4166	18.5	**	**
108	2743	474	2.1	1.03	26.1	206	0.9	138	0.6	2489	11.1	7899	35.1	5222	23.2	3396	15.1	**	**
120	3048	427	1.9	1.27	32.3	167	0.7	111	0.5	2178	9.7	6405	28.5	4211	18.7	**	**	**	**
																		$**\frac{KL}{r} > 200$	

(Uniform beam loading on 24" and 36" spans limited by weld shear.)

NOTES

- Long spans may have to be braced to prevent rotation and twist.
- Beam loading data already includes the weight of the member. This weight will have to be deducted in order to arrive at the net allowable load said beam span will carry.
- Maximum allowable uniformly distributed loads are listed for simple spans consisting of a beam on two supports. If load is to be concentrated at center of span, multiply given load by 0.5 and corresponding deflection figure by 0.8.

VERSABAR CORPORATION

Produced and stocked in the following finishes and materials:					
●	○	○	○	○	○
G-90 Galv.	Green	Aluminum	H.R.P.O.	SS 304	SS 316

Note: Perforated channel has a reduced loading capacity, see introduction pages 6 & 7.

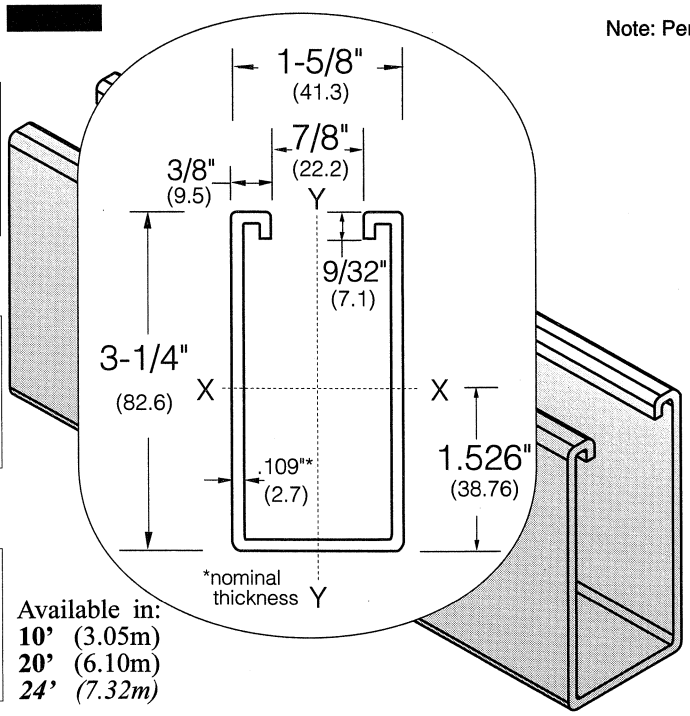

Available in:
10' (3.05m)
20' (6.10m)
24' *(7.32m)*

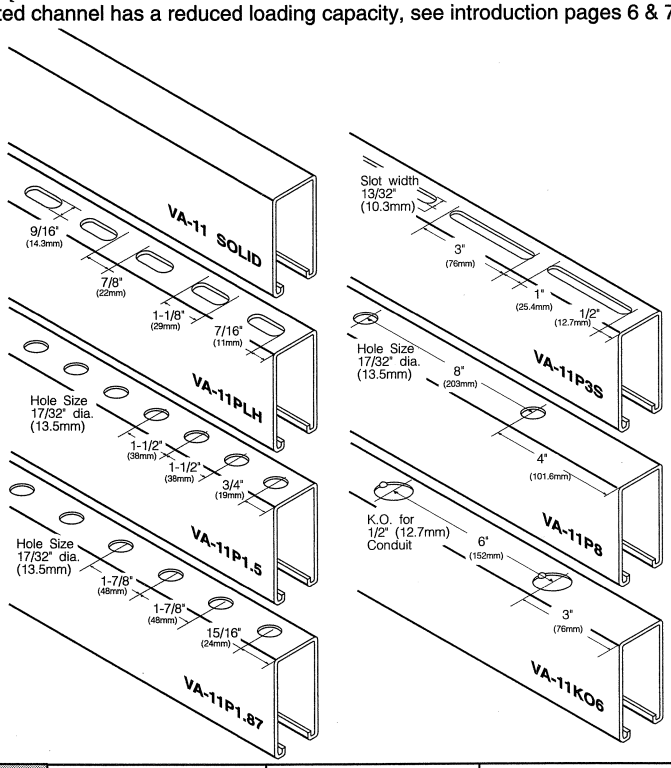

Engineering Data

elements of sections

VA-11

12 ga. **Wgt. Per L.F.** **3.05 lbs.** (Kg. Per M) (4.54)

Sectional Area	
sq. in.	cm^2
.897	5.79

X-X *axis*	Moment of inertia	Section modulus	Radius of gyration
	1.0917 In.^{4}	.6278 In.^{3}	1.112 In.
	45.44 cm.^{4}	10.29 cm.^{3}	2.82 cm.
Y-Y *axis*	**Moment of inertia**	**Section modulus**	**Radius of gyration**
	.4271 In.^{4}	.5256 In.^{3}	.696 In.
	17.78 cm.^{4}	8.61 cm.^{3}	1.77 cm.

beam loading data										column loading data											
Span or Unbraced Column Height		Maximum Allowable Uniform Loading		Deflection at Uniform Loading		Uniform Loading at Deflections				Maximum Allowable Loading at Slot Face K=.80		Maximum Allowable Column Load Applied at Center of Gravity							
						Span/240		Span/360				K=.65		K=.80		K=1.0		K=1.2	
in.	(mm)	Lbs.	kN	in.	(mm)	Lbs.	kN	Lbs.	kN	Lbs.	kN	Lbs.	kN	Lbs.	kN	Lbs.	kN	Lbs.	kN
24	610	5235	23.3	0.03	0.7	5235	23.3	5235	23.3	4700	20.9	8500	37.8	8200	36.5	7900	35.1	7400	32.9
36	914	3487	15.5	0.07	1.7	3487	15.5	3487	15.5	4200	18.7	7900	35.1	7400	32.9	6600	29.4	5700	25.4
48	1219	2618	11.6	0.12	3.0	2618	11.6	2618	11.6	3400	15.1	6000	26.7	5800	25.8	5000	22.2	3900	17.3
60	1524	2090	9.3	0.18	4.6	2100	9.3	1912	8.5	2700	12.0	5000	22.2	4500	20.0	3600	16.0	3000	13.3
72	1829	1745	7.8	0.26	6.7	1745	7.8	1327	5.9	2300	10.2	4000	17.8	3500	15.6	2795	12.4	2300	10.2
84	2134	1492	6.6	0.36	9.1	1465	6.5	977	4.3	1900	8.5	3000	13.3	2700	12.0	2300	10.2	1900	8.5
96	2438	1309	5.8	0.47	11.9	1122	5.0	747	3.3	1600	7.1	2800	12.5	2300	10.2	1970	8.8	1600	7.1
108	2743	1166	5.2	0.59	15.0	885	3.9	589	2.6	1350	6.0	2200	9.8	2000	8.9	1720	7.7	1500	6.7
120	3048	1042	4.6	0.73	18.6	716	3.2	478	2.1	1200	5.3	2000	8.9	1800	8.0	1530	6.8	**	**
144	3658	870	3.9	1.05	26.7	498	2.2	330	1.5									$**\frac{KL}{r} > 200$	
168	4267	748	3.3	1.43	36.4	367	1.6	245	1.1										
192	4877	656	2.9	1.87	47.5	279	1.2	188	0.8										
216	5486	580	2.6	2.37	60.1	219	1.0	149	0.7										
240	6096	524	2.3	2.92	74.3	178	0.8	120	0.5										

NOTES

- Long spans may have to be braced to prevent rotation and twist.
- Beam loading data already includes the weight of the member. This weight will have to be deducted in order to arrive at the net allowable load said beam span will carry.
- Maximum allowable uniformly distributed loads are listed for simple spans consisting of a beam on two supports. If load is to be concentrated at center of span, multiply given load by 0.5 and corresponding deflection figure by 0.8.

VERSABAR CORPORATION

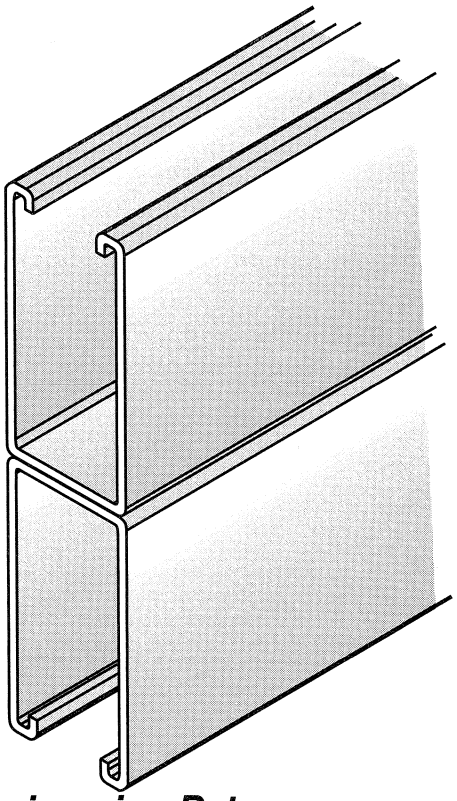

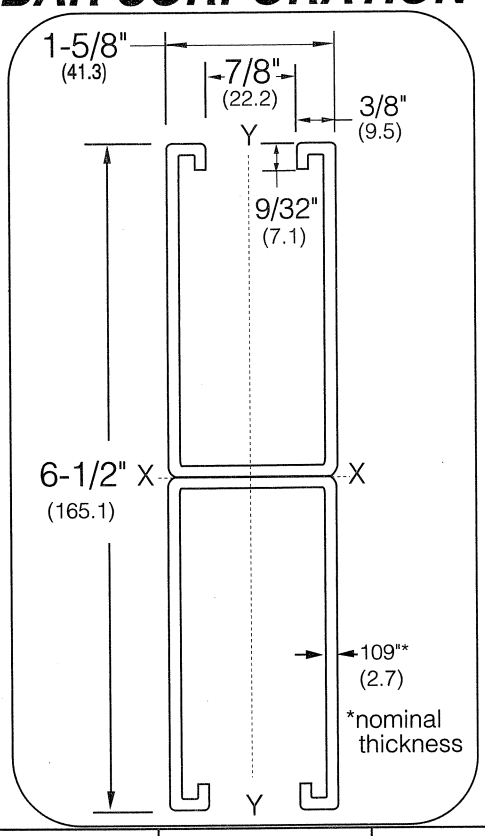

welded combinations

VA-11202

VA-11203

VA-11208

VA-11209

Engineering Data

elements of sections

VA-11201

12 ga. Wgt. Per L.F. 6.10 lbs. (Kg. Per M) (9.08)

Sectional Area	
sq. in.	cm^2
1.794	11.59

	Moment of inertia	Section modulus	Radius of gyration
X-X *axis*	6.2139 In.^{4} 258.64 cm.^{4}	1.9120 In.^{3} 31.33 cm.^{3}	1.876 In. 4.76 cm.
Y-Y *axis*	.8542 In.^{4} 35.55 cm.^{4}	1.0513 In.^{3} 17.23 cm.^{3}	.696 In. 1.77 cm.

beam loading data

Span or Unbraced Column Height		Maximum Allowable Uniform Loading		Deflection at Uniform Loading		Uniform Loading at Deflections Span/240		Uniform Loading at Deflections Span/360	
in.	(mm)	Lbs.	kN	in.	(mm)	Lbs.	kN	Lbs.	kN
24	610	5132	22.8	0.01	0.1	5132	22.8	5132	22.8
36	914	5132	22.8	0.02	0.4	5132	22.8	5132	22.8
48	1219	5132	22.8	0.04	1.0	5132	22.8	5132	22.8
60	1524	4525	20.1	0.08	2.0	4525	20.1	4525	20.1
72	1829	3775	16.8	0.11	2.8	3775	16.8	3775	16.8
84	2134	3240	14.4	0.15	3.8	3240	14.4	3240	14.4
96	2438	2840	12.6	0.20	5.1	2840	12.6	2840	12.6
108	2743	2515	11.2	0.25	6.4	2515	11.2	2515	11.2
120	3048	2270	10.1	0.31	7.9	2270	10.1	2270	10.1
144	3658	1890	8.4	0.44	11.2	1890	8.4	1695	7.5
168	4267	1620	7.2	0.60	15.2	1620	7.2	1250	5.6
192	4877	1415	6.3	0.79	20.1	1415	6.3	960	4.3
216	5486	1270	5.6	1.00	25.4	1140	5.1	760	3.4
240	6096	1140	5.1	1.24	31.5	915	4.1	620	2.8

(Uniform beam loading on 24" and 36" spans limited by weld shear.)

column loading data

Maximum Allowable Loading at Slot Face K=.80		Maximum Allowable Column Load Applied at Center of Gravity K=.65		K=.80		K=1.0		K=1.2	
Lbs.	kN	Lbs.	kN	Lbs.	kN	Lbs.	kN	Lbs.	kN
7740	34.4	18200	81.0	17710	78.8	17600	78.3	17500	77.8
7700	34.3	17590	78.2	17420	77.5	17200	76.5	16800	74.7
7500	33.4	17300	77.0	17020	75.7	16600	73.8	15900	70.7
7400	32.9	17000	75.6	16600	73.8	15800	70.3	14800	65.8
6200	27.6	16600	73.8	15900	70.7	14900	66.3	13400	59.6
5000	22.2	16200	72.1	15200	67.6	13700	60.9	11700	52.0
4050	18.0	15700	69.8	14300	63.6	13000	57.8	9800	43.6
3340	14.9	15000	66.7	13400	59.6	11000	48.9	7800	34.7
2790	12.4	14600	64.9	12600	56.0	9100	40.5	**	**
								$**\frac{KL}{r} > 200$	

NOTES

- Long spans may have to be braced to prevent rotation and twist.
- Beam loading data already includes the weight of the member. This weight will have to be deducted in order to arrive at the net allowable load said beam span will carry.
- Maximum allowable uniformly distributed loads are listed for simple spans consisting of a beam on two supports. If load is to be concentrated at center of span, multiply given load by 0.5 and corresponding deflection figure by 0.8.

VERSABAR CORPORATION

●	○	○	○	○	○
G-90 Galv.	Green	Aluminum	H.R.P.O.	SS 304	SS 316

Note: Perforated channel has a reduced loading capacity, see introduction pages 6 & 7.

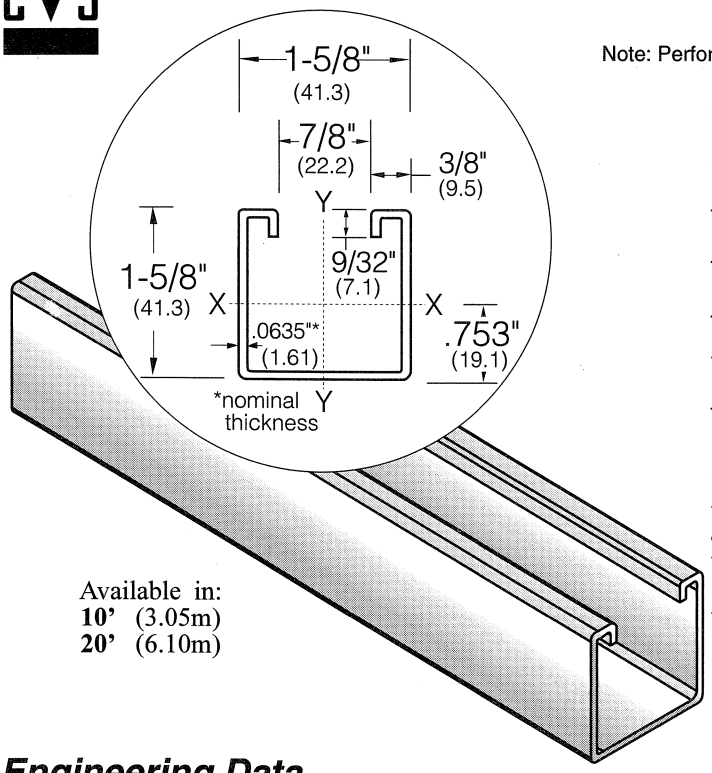

Available in:
10' (3.05m)
20' (6.10m)

Special Order Item - Non Stock

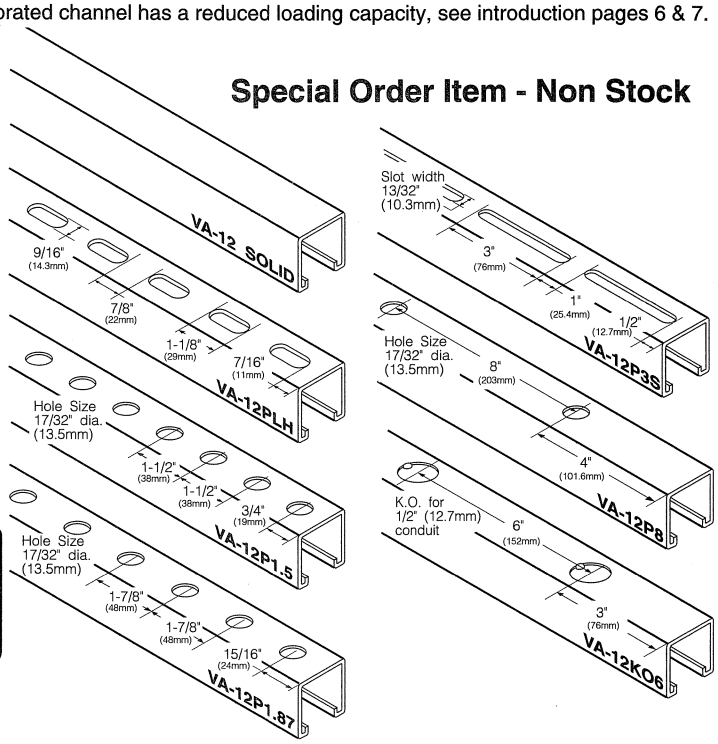

Engineering Data

elements of sections

VA-12

16 ga. Wgt. Per L.F. (Kg. Per M) **1.20 lbs.** (1.787)

Sectional Area	
sq. in.	cm^2
.340	2.20

X-X *axis*	Moment of inertia	Section modulus	Radius of gyration
	.123 In. ^{4}	.140 In. ^{3}	.610 In.
	5.11 cm. ^{4}	2.288 cm. ^{3}	1.546 cm.
Y-Y *axis*	**Moment of inertia**	**Section modulus**	**Radius of gyration**
	.149 In. ^{4}	.184 In. ^{3}	.672 In.
	6.20 cm. ^{4}	3.00 cm. ^{3}	1.704 cm.

beam loading data										column loading data									
Span or Unbraced Column Height		Maximum Allowable Uniform Loading		Deflection at Uniform Loading		Uniform Loading at Deflections				Maximum Allowable Loading at Slot Face K=.80		Maximum Allowable Column Load Applied at Center of Gravity							
						Span/240		Span/360				K=.65		K=.80		K=1.0		K=1.2	
in.	(mm)	Lbs.	kN	in.	(mm)	Lbs.	kN	Lbs.	kN	Lbs.	kN	Lbs.	kN	Lbs.	kN	Lbs.	kN	Lbs.	kN
24	610	1160	5.2	0.06	1.4	1160	5.2	1160	5.2	2100	9.3	3850	17.1	3730	16.6	3550	15.8	3330	14.8
36	914	770	3.4	0.13	3.3	770	3.4	600	2.7	1740	7.7	3450	15.3	3330	14.8	2960	13.2	2540	11.3
48	1219	578	2.6	0.23	5.8	500	2.2	335	1.5	1220	5.4	1940	8.6	1870	8.3	1770	7.9	1660	7.4
60	1524	462	2.1	0.36	9.1	320	1.4	207	0.9	890	4.0	1240	5.5	1200	5.3	1130	5.0	1060	4.7
72	1829	382	1.7	0.51	13.1	220	1.0	148	0.7	670	3.0	860	3.8	830	3.7	780	3.5	730	3.2
84	2134	328	1.5	0.70	17.8	160	0.7	106	0.5	510	2.3	630	2.8	600	2.7	570	2.5	540	2.4
96	2438	287	1.3	0.91	23.2	120	0.5	83	0.4	400	1.8	480	2.1	460	2.0	440	2.0	410	1.8
108	2743	255	1.1	1.16	29.4	95	0.4	62	0.3	320	1.4	370	1.6	360	1.6	350	1.6	**	**
120	3048	230	1.0	1.43	36.2	77	0.3	46	0.2	270	1.2	300	1.3	290	1.3	290	1.3	**	**
144	3658	190	0.8	2.13	54.1	52	0.2	35	0.2									**	
168	4267	160	0.7	2.87	72.9	32	0.1	27	0.1									$\frac{KL}{r} > 200$	
192	4877	140	0.6	3.78	96.0	20	0.1												
216	5486	120	0.5	4.66	118.4	15	0.1												
240	6096	110	0.5	5.90	149.9														

NOTES

- Long spans may have to be braced to prevent rotation and twist.
- Beam loading data already includes the weight of the member. This weight will have to be deducted in order to arrive at the net allowable load said beam span will carry.
- Maximum allowable uniformly distributed loads are listed for simple spans consisting of a beam on two supports. If load is to be concentrated at center of span, multiply given load by 0.5 and corresponding deflection figure by 0.8.

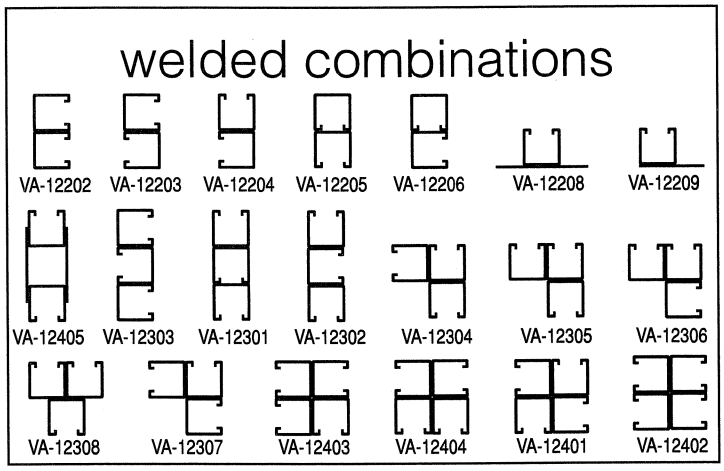

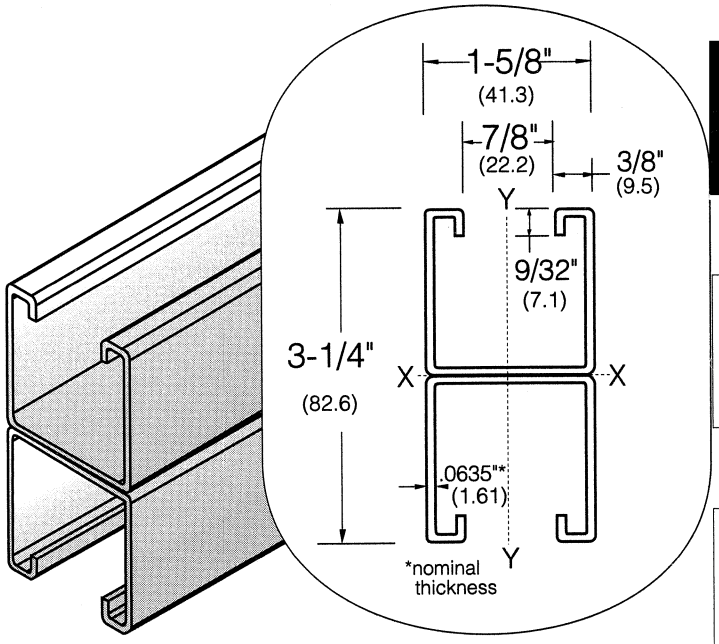

Engineering Data

Special Order Item - Non Stock

elements of sections

VA-12201

16 ga. **Wgt. Per L.F.** **2.40 lbs.** (Kg. Per M) (3.574)

Sectional Area	
sq. in.	cm^2
.681	4.40

	Moment of inertia	Section modulus	Radius of gyration
X-X *axis*	.612 In. ^{4} / 25.47 cm. ^{4}	.377 In. ^{3} / 6.166 cm. ^{3}	.961 In. / 2.436 cm.
Y-Y *axis*	.299 In. ^{4} / 12.44 cm. ^{4}	.368 In. ^{3} / 6.019 cm. ^{3}	.672 In. / 1.7037 cm.

beam loading data

Span or Unbraced Column Height		Maximum Allowable Uniform Loading		Deflection at Uniform Loading		Uniform Loading at Deflections Span/240		Uniform Loading at Deflections Span/360	
in.	(mm)	Lbs.	kN	in.	(mm)	Lbs.	kN	Lbs.	kN
24	610	1210	5.4	0.01	0.4	1210	5.4	1210	5.4
36	914	1210	5.4	0.04	1.0	1210	5.4	1210	5.4
48	1219	1210	5.4	0.10	2.4	1210	5.4	1210	5.4
60	1524	1100	4.9	0.19	4.8	1100	4.9	1072	4.8
72	1829	1050	4.7	0.28	7.1	1050	4.7	740	3.3
84	2134	900	4.0	0.38	9.7	820	3.6	540	2.4
96	2438	788	3.5	0.50	12.7	630	2.8	410	1.8
108	2743	700	3.1	0.63	16.1	495	2.2	330	1.5
120	3048	625	2.8	0.78	19.9	400	1.8	265	1.2
144	3658	518	2.3	1.13	28.7	275	1.2	185	0.8
168	4267	438	1.9	1.53	38.9	202	0.9	135	0.6
192	4877	385	1.7	2.03	51.6	155	0.7	105	0.5
216	5486	330	1.5	2.53	64.3	115	0.5	75	0.3
240	6096	302	1.3	3.17	80.5	95	0.4	65	0.3

(Uniform beam loading on 24" and 36" spans limited by weld shear.)

column loading data

Maximum Allowable Loading at Slot Face K=.80		Maximum Allowable Column Load Applied at Center of Gravity K=.65		K=.80		K=1.0		K=1.2	
Lbs.	kN	Lbs.	kN	Lbs.	kN	Lbs.	kN	Lbs.	kN
3590	16.0	8090	36.0	8050	35.8	7970	35.5	7880	35.1
3520	15.7	7980	35.5	7880	35.1	7710	34.3	7500	33.4
3440	15.3	7830	34.8	7640	34.0	7340	32.7	6970	31.0
3060	13.6	7630	33.9	7340	32.7	6870	30.6	6290	28.0
2380	10.6	7380	32.8	6970	31.0	6290	28.0	5460	24.3
1880	8.4	7090	31.5	6540	29.1	5610	25.0	4480	19.9
1510	6.7	6760	30.1	6030	26.8	4820	21.4	3460	15.4
1230	5.5	6390	28.4	5460	24.3	3930	17.5	2730	12.1
1010	4.5	5960	26.5	4825	21.5	3190	14.2	**	**
								$**\frac{KL}{r} > 200$	

NOTES

- Long spans may have to be braced to prevent rotation and twist.
- Beam loading data already includes the weight of the member. This weight will have to be deducted in order to arrive at the net allowable load said beam span will carry.
- Maximum allowable uniformly distributed loads are listed for simple spans consisting of a beam on two supports. If load is to be concentrated at center of span, multiply given load by 0.5 and corresponding deflection figure by 0.8.

VERSABAR CORPORATION

Produced and stocked in the following finishes and materials:					
●	○	○	○	○	○
G-90 Galv.	Green	Aluminum	H.R.P.O.	SS 304	SS 316

Note: Perforated channel has a reduced loading capacity, see introduction pages 6 & 7.

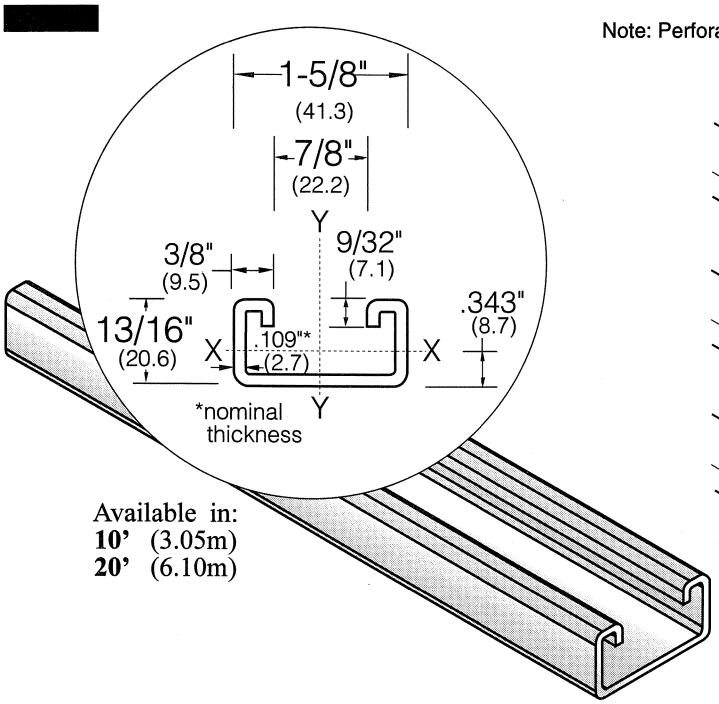

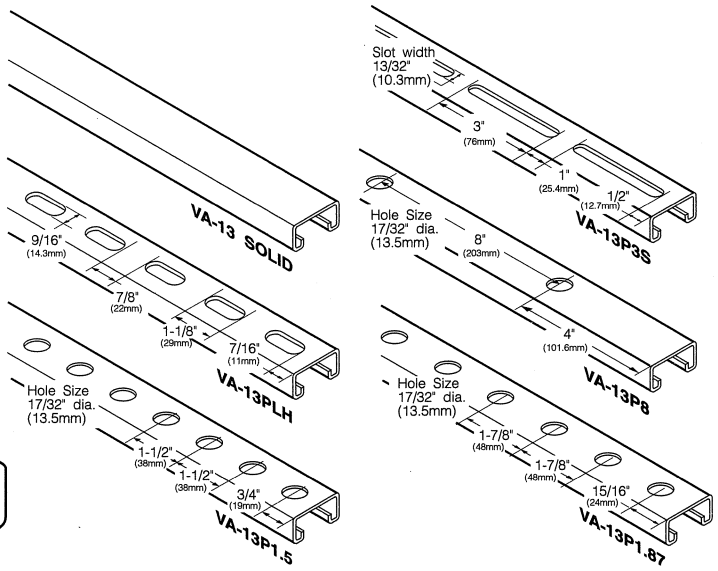

Engineering Data

elements of sections

VA-13

12 ga. Wgt. Per L.F. 1.27 lbs. (Kg. Per M) (1.89)

Sectional Area	
sq. in.	cm^2
.374	2.41

	Moment of inertia	Section modulus	Radius of gyration
X-X *axis*	.0308 In. ^{4} 1.28 cm. ^{4}	.0647 In. ^{3} 1.06 cm. ^{3}	.284 In. .72 cm.
Y-Y *axis*	.1375 In. ^{4} 5.72 cm. ^{4}	.1692 In. ^{3} 2.77 cm. ^{3}	.599 In. 1.52 cm.

beam loading data												column loading data									
Span or Unbraced Column Height		Maximum Allowable Uniform Loading		Deflection at Uniform Loading		Uniform Loading at Deflections				Maximum Allowable Loading at Slot Face		Maximum Allowable Column Load Applied at Center of Gravity									
						Span/240		Span/360		K=.80		K=.65		K=.80		K=1.0		K=1.2	
in.	(mm)	Lbs.	kN	in.	(mm)	Lbs.	kN	Lbs.	kN	Lbs.	kN	Lbs.	kN	Lbs.	kN	Lbs.	kN	Lbs.	kN
24	610	532	2.4	0.11	2.7	502	2.2	332	1.5	2750	12.2	7870	35.0	7510	33.4	6515	29.0	5390	24.0
36	914	358	1.6	0.24	6.1	223	1.0	145	0.6	2150	9.6	6650	29.6	5390	24.0	3600	16.0	2500	11.1
48	1219	265	1.2	0.43	10.8	122	0.5	80	0.4	1558	6.9	4780	21.3	3170	14.1	2030	9.0	**	**
60	1524	212	0.9	0.67	16.9	78	0.3	52	0.2	1158	5.2	3078	13.7	2030	9.0	**	**	**	**
72	1829	175	0.8	0.96	24.4	54	0.2	34	0.2	888	4.0	2135	9.5	**	**	**	**		
84	2134	152	0.7	1.31	33.2	39	0.2	25	0.1	700	3.1	1570	7.0	**	**	**	**		
96	2438	132	0.6	1.71	43.4	30	0.1	20	0.1	565	2.5	**	**	**	**				
108	2743	118	0.5	2.16	54.9	22	0.1	16	0.1	460	2.0	**	**						
120	3048	102	0.5	2.67	67.7	18	0.1	12	0.1	390	1.7	**	**						

$**\frac{KL}{r} > 200$

NOTES

- Long spans may have to be braced to prevent rotation and twist.
- Beam loading data already includes the weight of the member. This weight will have to be deducted in order to arrive at the net allowable load said beam span will carry.
- Maximum allowable uniformly distributed loads are listed for simple spans consisting of a beam on two supports. If load is to be concentrated at center of span, multiply given load by 0.5 and corresponding deflection figure by 0.8.

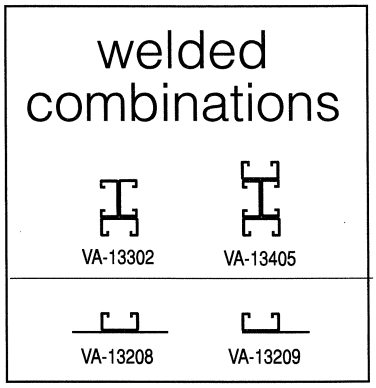

VA-13201 Galv. Features a superior *non-welded* "Toggle Lock" design.

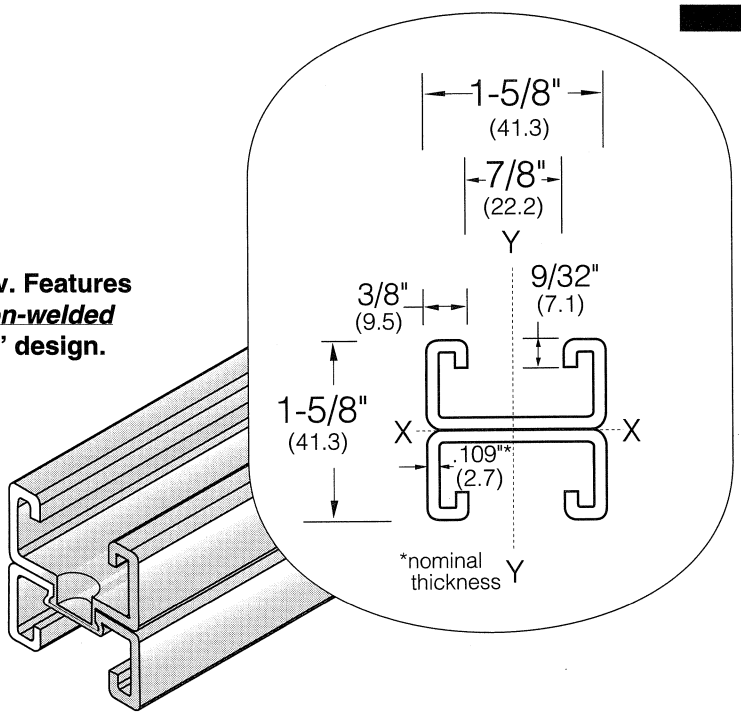

cross sectional cut of spot connection shown for illustrational purposes

Engineering Data

elements of sections

VA-13201

12 ga. **Wgt. Per L.F.** (Kg. Per M) **2.54 lbs.** (3.78)

Sectional Area	
sq. in.	cm^2
.747	4.82

	Moment of inertia	Section modulus	Radius of gyration
X-X *axis*	.1481 In.^{4} 6.16 cm.^{4}	.1823 In.^{3} 2.99 cm.^{3}	.440 In. 1.12 cm.
Y-Y *axis*	.2750 In.^{4} 11.44 cm.^{4}	.3385 In.^{3} 5.55 cm.^{3}	.599 In. 1.52 cm.

beam loading data										column loading data											
Span or Unbraced Column Height		Maximum Allowable Uniform Loading		Deflection at Uniform Loading		Uniform Loading at Deflections				Maximum Allowable Loading at Slot Face K=.80		Maximum Allowable Column Load Applied at Center of Gravity							
						Span/240		Span/360				K=.65		K=.80		K=1.0		K=1.2	
in.	(mm)	Lbs.	kN	in.	(mm)	Lbs.	kN	Lbs.	kN	Lbs.	kN	Lbs.	kN	Lbs.	kN	Lbs.	kN	Lbs.	kN
24	610	1268	5.6	0.05	1.3	1268	5.6	1268	5.6	4950	22.0	18140	80.7	17400	77.4	16410	73.0	15270	67.9
36	914	1011	4.5	0.14	3.6	1011	4.5	715	3.2	4490	20.0	16540	73.6	15200	67.6	13370	59.5	11240	50.0
48	1219	755	3.4	0.25	6.4	602	2.7	400	1.8	3960	17.6	14650	65.2	12690	56.4	9680	43.1	6775	30.1
60	1524	602	2.7	0.39	9.9	382	1.7	255	1.1	3380	15.0	12510	55.6	9680	43.1	6245	27.8	4330	19.3
72	1829	502	2.2	0.56	14.3	268	1.2	177	0.8	2795	12.4	10080	44.8	6775	30.1	4330	19.3	3010	13.4
84	2134	430	1.9	0.77	19.5	195	0.9	130	0.6	2330	10.4	7540	33.5	4980	22.2	3180	14.1	**	**
96	2438	377	1.7	1.00	25.4	150	0.7	100	0.4	1970	8.8	5770	25.7	3810	16.9	**	**	**	**
108	2743	335	1.5	1.27	32.2	118	0.5	77	0.3	1680	7.5	4560	20.3	3010	13.4	**	**	**	**
120	3048	302	1.3	1.56	39.7	92	0.4	62	0.3	1450	6.5	3690	16.4	**	**	**	**	$**\frac{KL}{r} > 200$	

(Uniform beam loading on 24" and 36" spans limited by weld shear.)

NOTES

- Long spans may have to be braced to prevent rotation and twist.
- Beam loading data already includes the weight of the member. This weight will have to be deducted in order to arrive at the net allowable load said beam span will carry.
- Maximum allowable uniformly distributed loads are listed for simple spans consisting of a beam on two supports. If load is to be concentrated at center of span, multiply given load by 0.5 and corresponding deflection figure by 0.8.

VERSABAR CORPORATION

END CAPS and CLOSURE STRIP

VA-9 Closure Strip

Wgt. 42# per C/LF (63 kg M)

G-90 Mill Galv. Finish*

*also available in stainless and aluminum

VF-1001

UL LISTED

Wgt. 11# per C (5 kg)

also available in stainless and aluminum

Zinc Plated Finish Std.*

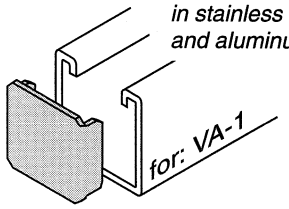

VF-1001-2

UL LISTED

Wgt. 11# per C (5 kg)

Zinc Plated Finish

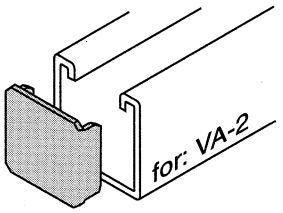

VF-1001-3

UL LISTED

Wgt. 17# per C (7.7 kg)

Zinc Plated Finish

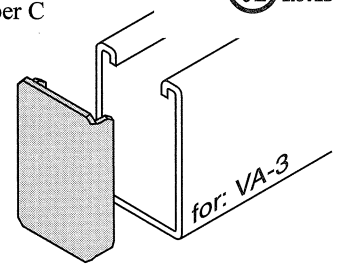

VF-1001-4

Wgt. 4.8# per C (2.2 kg)

Zinc Plated Finish

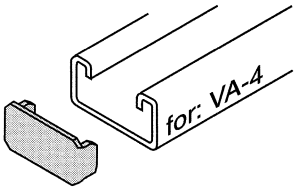

VF-1001-5

Wgt. 4.8# per C (2.2 kg)

Zinc Plated Finish

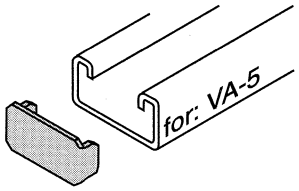

VF-1001-6

Wgt. 9.5# per C (4.3 kg)

Zinc Plated Finish

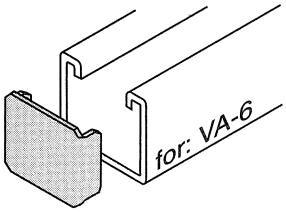

VF-1001-7

Wgt. 9.5# per C (4.3 kg)

Zinc Plated Finish

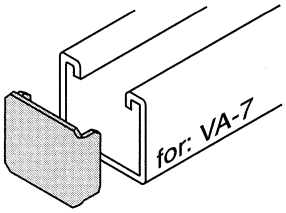

VF-1001-8

Wgt. 7.5# per C (3.4 kg)

Zinc Plated Finish

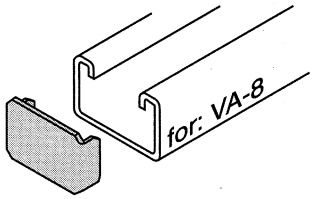

VF-1001-10

Wgt. 7.5# per C (3.4 kg)

Zinc Plated Finish

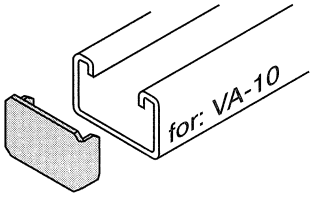

VF-1001-11

Wgt. 20# per C (9.1 kg)

Zinc Plated Finish

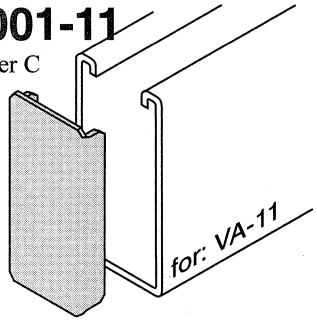

VF-1001-12

Wgt. 11# per C (5 kg)

Zinc Plated Finish

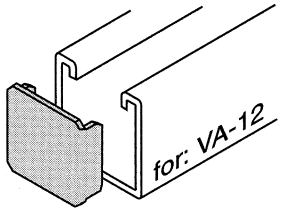

VF-1001-13

Wgt. 4.8# per C (2.2 kg)

Zinc Plated Finish

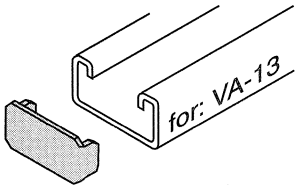

VF-1001-1-PL *Plastic*

Wgt. 2.8# per C (1.27 kg)

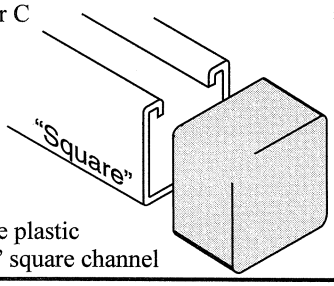

White flexible plastic
Fits all 1-5/8" square channel

VF-1001-4-PL *Plastic*

Wgt. 2# per C (.91 kg)

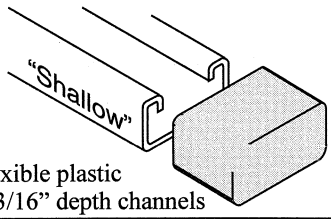

White flexible plastic
Fits all 13/16" depth channels